FORM MS–6749–1/16/2003
REPLACES FORM MS–6749–4Q–10/2001
FILE IN SECT. 2 OF SERVICE MANUAL

Illustrated Parts List

Model Series

118400

TYPE NUMBERS
0036 Through 0132.

TO FIND
THE CORRECT NUMBER OF THE PART YOU NEED:
FOLLOW THE INSTRUCTIONS BELOW

A. Refer to Engine Model, Type and Code Number that is stamped on the blower housing of engine. Engine type numbers such as 0123 01 are listed only as 0123 in most instances. The two digits (01 or 02, etc.) to the right of the space may be required for more accurate parts identification in some instances. Select the Illustrated Parts List covering the correct Model Series and Type Number.

B. Refer to the Illustrations and compare the original part with Illustration. The number next to the illustration is the Reference Number. Assemblies include all parts shown in frames. All parts shown in assembly frames having individual reference numbers can be purchased separately.

C. After the Reference Number has been identified, refer to the Numerical text, where Reference and Primary Part Number are listed. THE PRIMARY PART IS USED ON ALL TYPE NUMBERS EXCEPT THOSE TYPE NUMBERS UNDER “NOTE.”

D. If a “Note” appears below the Primary Part Number, it means that this part differs from the Primary Part for certain types. If your Type number is listed under “Note,” order the part referred to at the “Note.”

E. If your Engine Type Number does not appear after any part number listed under “Note,” use the Primary Part Number.

F. For Engine Type Numbers not covered by this book, check other Parts Lists having the same engine model or contact your source of supply.

PRINTED IN U.S.A.

BRIGGS & STRATTON ®

COPYRIGHT by BRIGGS & STRATTON CORPORATION
All rights reserved. No part of this material may be reproduced or transmitted, in any form or by any means, electronic or mechanical, including photocopying, recording or by any information storage and retrieval system, without permission in writing from Briggs & Stratton Corporation.

118400

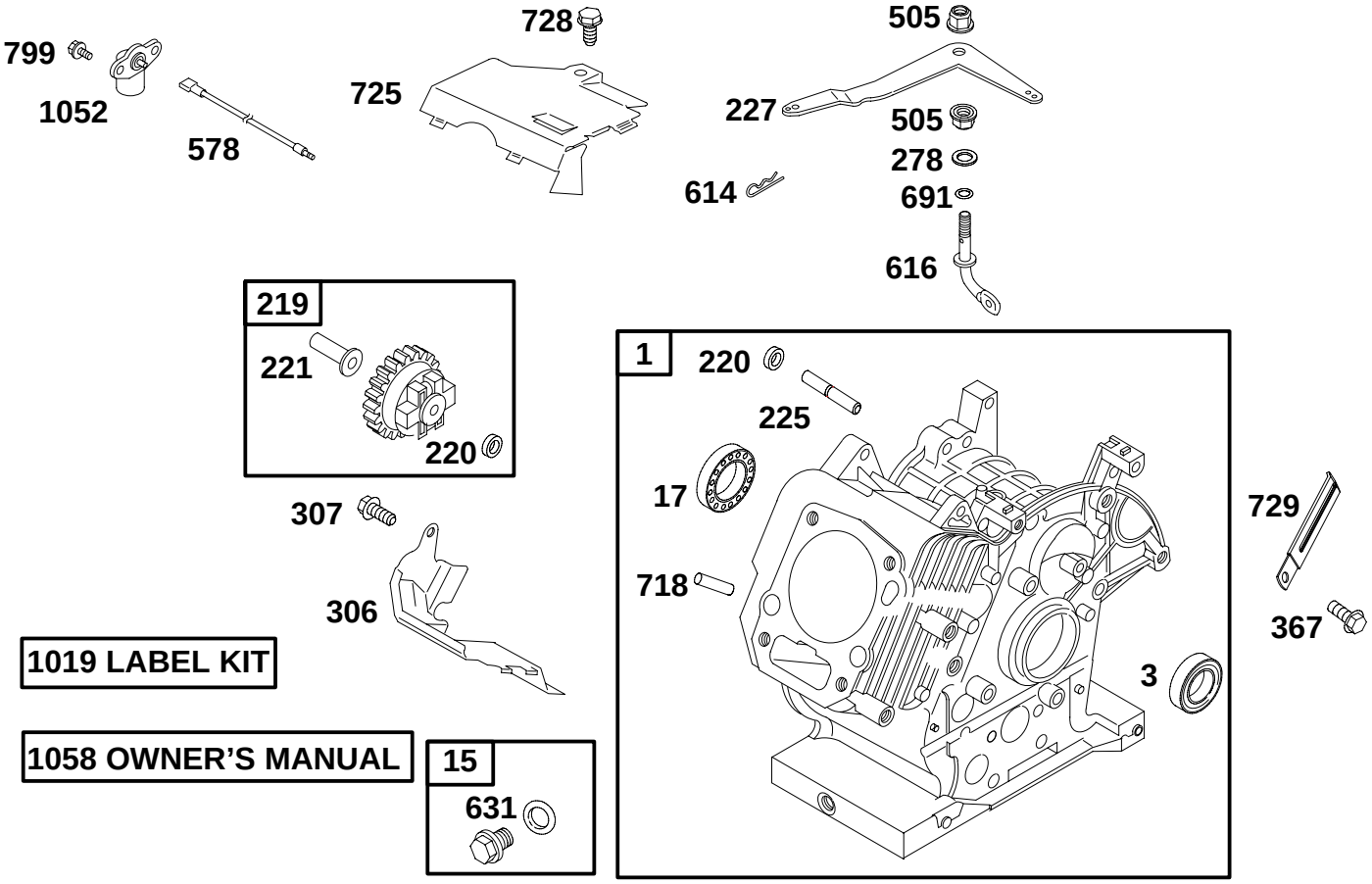

REF. NO.	PART NO.	DESCRIPTION
1	**715810**	Cylinder Assembly
3	**★711139**	Seal–Oil (Magneto Side)
15	**715811**	Plug–Oil Drain
17	**711140**	Bearing–Ball
219	**715679**	Gear–Governor
220	**710035**	Washer (Governor Gear)
221	**710027**	Cup–Governor
225	**710028**	Shaft–Governor Gear
227	**711205**	Lever–Governor Control
278	**710058**	Washer (Governor Control Lever)
306	**711211**	Shield–Cylinder
307	**710023**	Screw (Cylinder Shield)
367	**711427**	Screw (Wire Clip)
505	**711208**	Nut (Governor Control Lever)
578	**711247**	Wire Assembly (Oil Sensor)
614	**710056**	Pin–Cotter
616	**711204**	Crank–Governor
631	**★711188**	Washer (Oil Drain Plug)
691	**★710055**	Seal–Governor Shaft
718	**710005**	Pin–Locating
725	**711251**	Shield–Heat
728	**710023**	Screw (Heat Shield)
729	**710407**	Clip–Wire
799	**710057**	Screw (Oil Sensor)
1019	**715865**	Kit–Label
1052	**711246**	Sensor–Oil
1058	**MS6669**	Owner's Manual

● Included in Carburetor Overhaul Kit–Ref. No. 121.
★ Included in Engine Gasket Set–Ref. No. 358.
◆ Included in Carburetor Gasket Set–Ref. No. 977.
Δ Included in Valve Gasket Set–Ref. No. 1095.

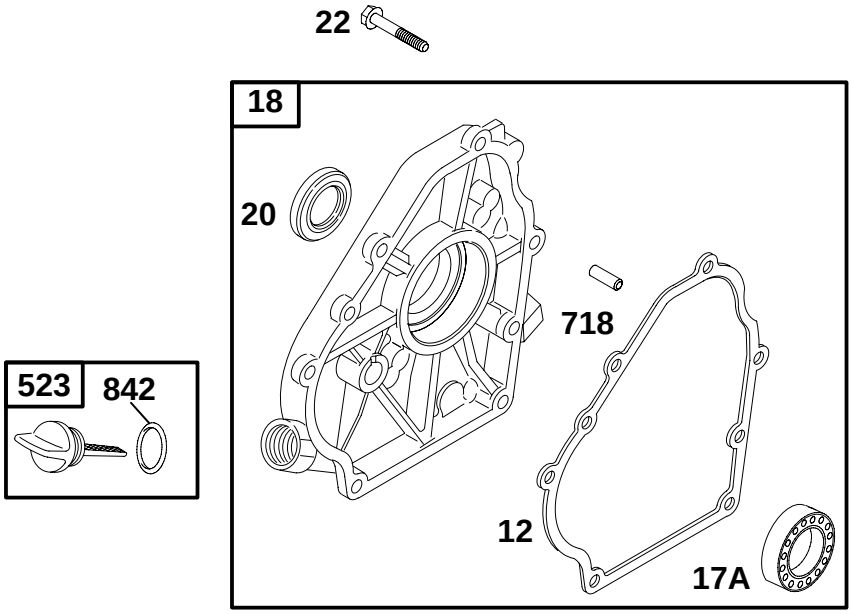

REF. NO.	PART NO.	DESCRIPTION
12	⋆**711174**	Gasket–Crankcase
17A	**711175**	Bearing–Ball
18	**715842**	Cover–Crankcase
		–––––––– Note ––––––
		711254 Cover–Crankcase Used on Type No(s). 0120.
20	⋆**710031**	Seal–Oil (PTO Side)
22	**710032**	Screw (Crankcase Cover)
523	**715588**	Dipstick
718	**710005**	Pin–Locating
842	⋆**710029**	Seal–O–Ring (Dipstick Tube)

● Included in Carburetor Overhaul Kit–Ref. No. 121.
⋆ Included in Engine Gasket Set–Ref. No. 358.
◆ Included in Carburetor Gasket Set–Ref. No. 977.
Δ Included in Valve Gasket Set–Ref. No. 1095.

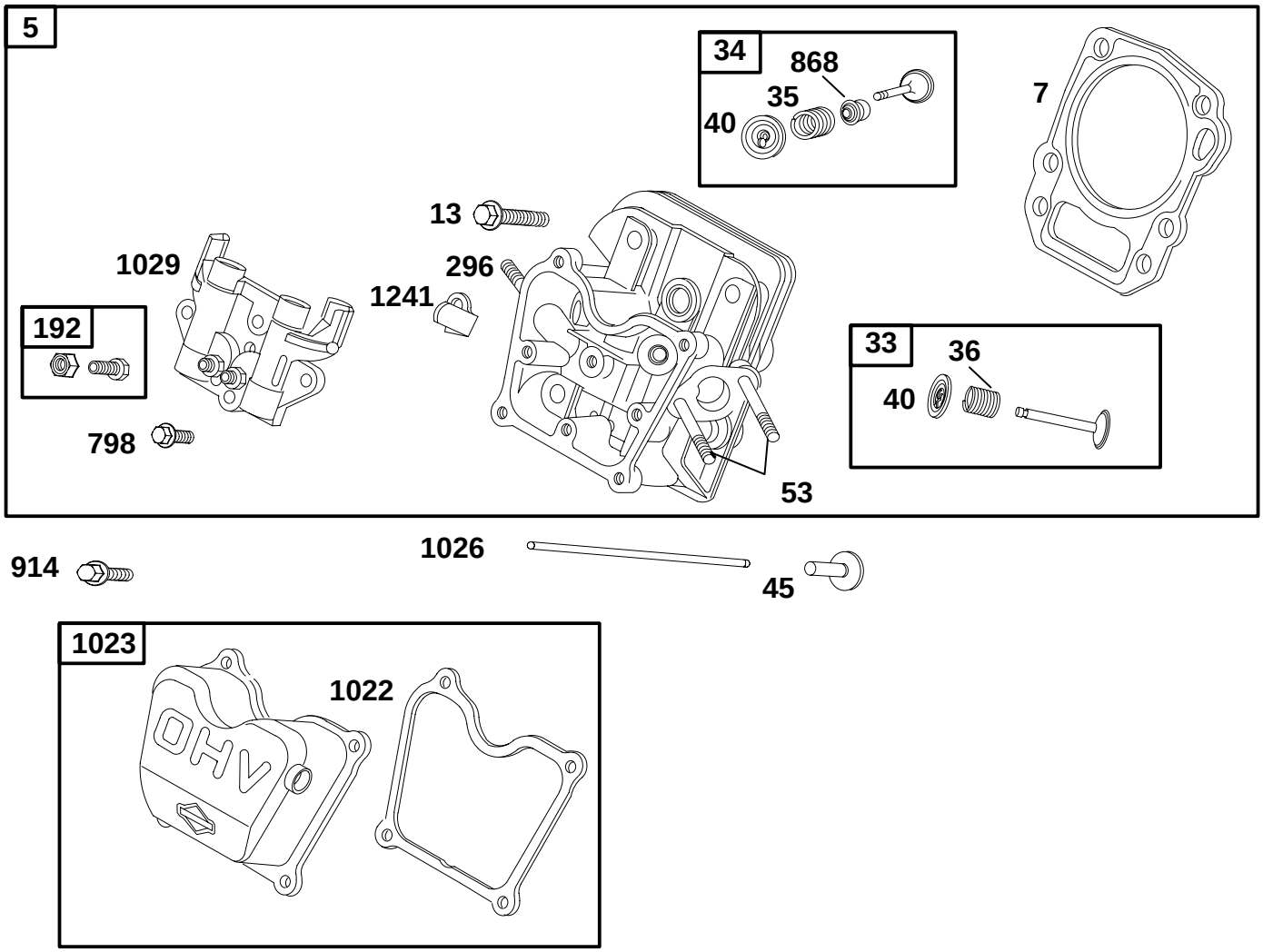

REF. NO.	PART NO.	DESCRIPTION
5	**715812**	Head–Cylinder
7	**∆★711129**	Gasket–Cylinder Head
13	**710020**	Screw (Cylinder Head)
33	**715846**	Valve–Exhaust
34	**715845**	Valve–Intake
35	**711087**	Spring–Valve (Intake)
36	**711087**	Spring–Valve (Exhaust)
40	**711086**	Retainer–Valve
45	**711173**	Tappet–Valve
53	**710148**	Stud (Carburetor)
192	**715841**	Adjuster–Rocker Arm
296	**710099**	Stud (Muffler)
798	**710234**	Screw (Rocker Arm)
868	**∆711287**	Seal–Valve
914	**710057**	Screw (Rocker Cover)
1022	**∆★711112**	Gasket–Rocker Cover
1023	**715840**	Cover–Rocker Arm
1026	**711176**	Rod–Push
1029	**715814**	Arm–Rocker
1241	**711084**	Plate–Valve Spring

● Included in Carburetor Overhaul Kit–Ref. No. 121.
★ Included in Engine Gasket Set–Ref. No. 358.
◆ Included in Carburetor Gasket Set–Ref. No. 977.
∆ Included in Valve Gasket Set–Ref. No. 1095.

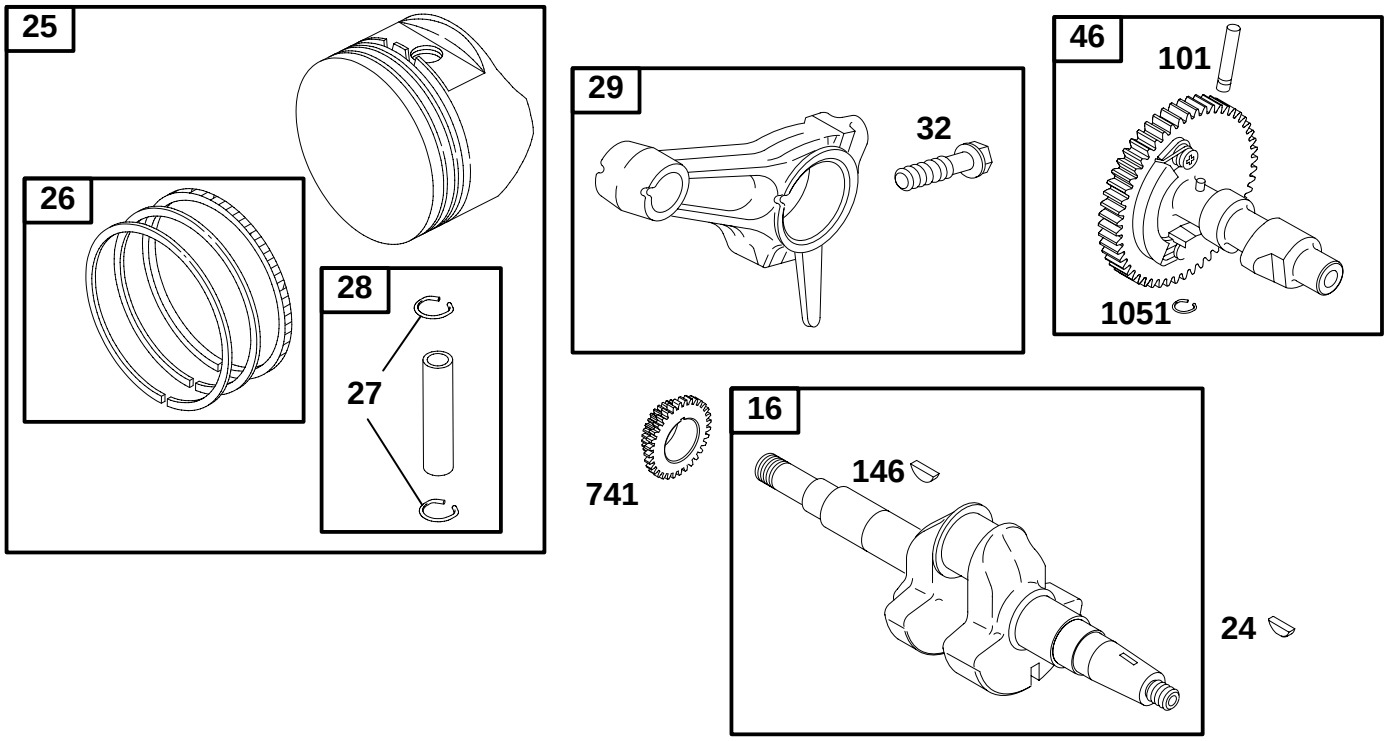

REF. NO.	PART NO.	DESCRIPTION
16	**711190**	Crankshaft (SAE 3/4" Keyway) Used on Type No(s). 0036, 0115, 0130. **–––––––– Note ––––––** **711331** Crankshaft (SAE Taper) Used on Type No(s). 0061, 0116, 0118, 0123. **711332** Crankshaft (SAE 5/8" Threaded) Used on Type No(s). 0125, 0127. **711333**Crankshaft (SAE 3/4" Threaded) Used on Type No(s). 0124. **715903** Crankshaft (SAE Keyway) Used on Type No(s). 0060. **715906** Crankshaft (JIS Keyway) Used on Type No(s). 0120.
24	**710037**	Key–Flywheel
25	**715850**	Piston Assembly (Standard) **–––––––– Note ––––––** **715851** Piston Assembly (.010" Oversize) **715852** Piston Assembly (.020" Oversize)
26	**715016**	Ring Set (Standard) **–––––––– Note ––––––** **715017** Ring Set (.010" Oversize) **715018** Ring Set (.020" Oversize)
27	**711172**	Lock–Piston Pin
28	**715853**	Pin–Piston (Standard)
29	**715847**	Rod–Connecting (Standard) **–––––––– Note ––––––** **715849** Rod–Connecting (020" Undersize)
32	**710041**	Screw (Connecting Rod)
46	**715844**	Camshaft (Spur Gear With Compression Release)
101	**711193**	Pin–Shaft
146	**710037**	Key–Timing
741	**711191**	Gear–Timing (Spur Gear)
1051	**710548**	Ring–Retaining

● Included in Carburetor Overhaul Kit–Ref. No. 121.
★ Included in Engine Gasket Set–Ref. No. 358.
◆ Included in Carburetor Gasket Set–Ref. No. 977.
Δ Included in Valve Gasket Set–Ref. No. 1095.

118400

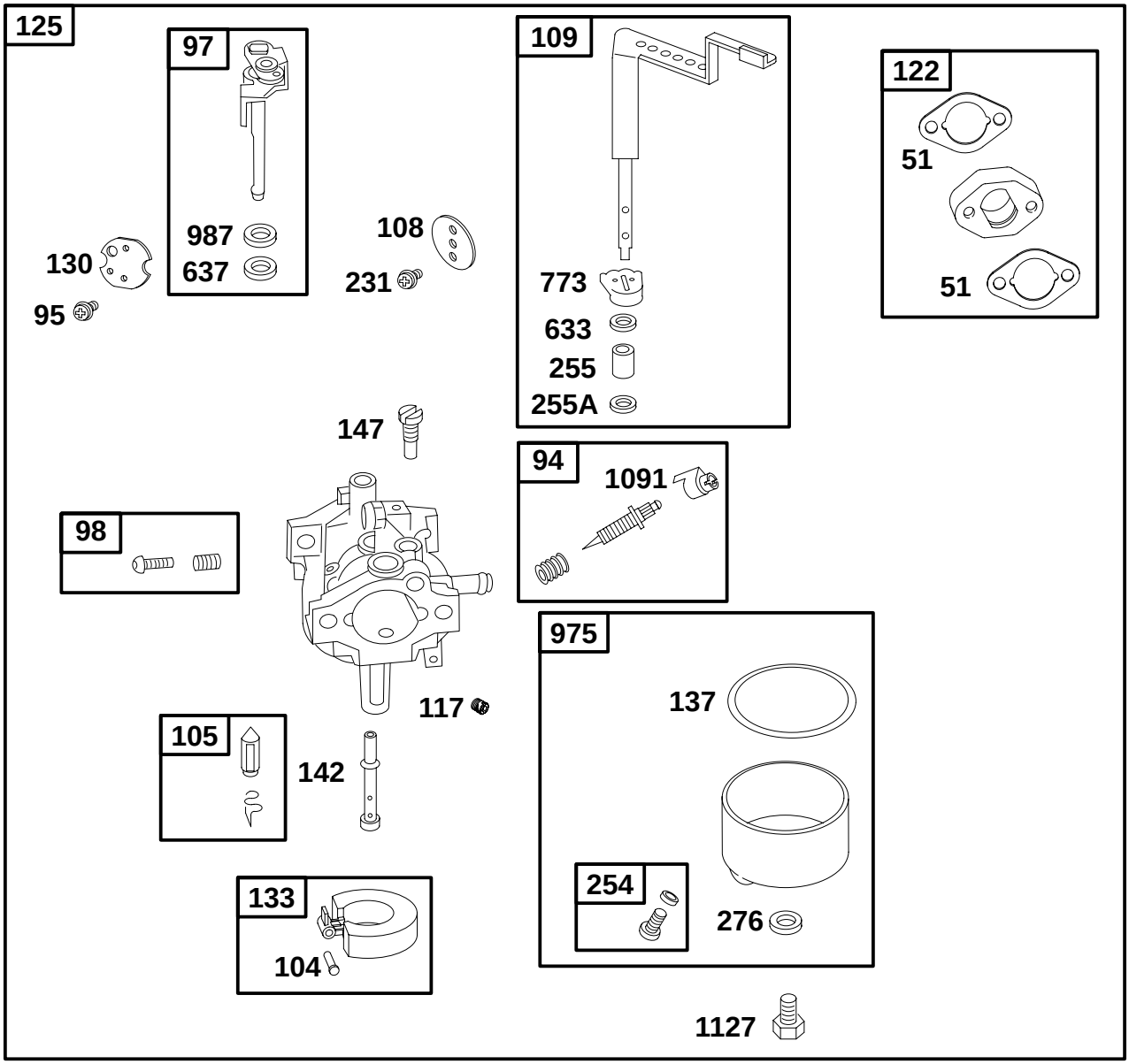

REF. NO.	PART NO.	DESCRIPTION
51•⋆♦△	710060	Gasket–Intake
94	715293	Kit–Idle Mixture
95	711311	Screw (Throttle Valve)
97	715869	Shaft–Throttle
98	715872	Kit–Idle Speed
104	●710195	Pin–Float Hinge
105	●715868	Valve–Float Needle
108	711313	Valve–Choke
109	715873	Shaft–Choke
117	●711323	Jet–Main (Standard)
122	715034	Spacer–Carburetor
125	715866	Carburetor
130	711312	Valve–Throttle
133	715079	Float–Carburetor
137	●◆711318	Gasket–Float Bowl
142	●711322	Nozzle–Carburetor (Standard)
147	●711315	Jet–Pilot
231	711314	Screw (Choke Valve)
254	715871	Drain–Carburetor Bowl
255	●710177	Bushing–Choke Shaft
255A	●710179	Bushing–Choke Shaft
276	●◆711319	Washer–Sealing
633	●◆	Seal–Choke/Throttle Shaft (Sold in Kit Only)
637	●◆	Washer (Throttle Shaft, Sold in Kit Only)
773	●710175	Retainer
975	715870	Bowl–Float
987	●711324	Seal–Throttle Shaft
1091	710485	Cap–Limiter
1127	711320	Screw (Float Bowl)

● Included in Carburetor Overhaul Kit–Ref. No. 121.
⋆ Included in Engine Gasket Set–Ref. No. 358.
◆ Included in Carburetor Gasket Set–Ref. No. 977.
△ Included in Valve Gasket Set–Ref. No. 1095.

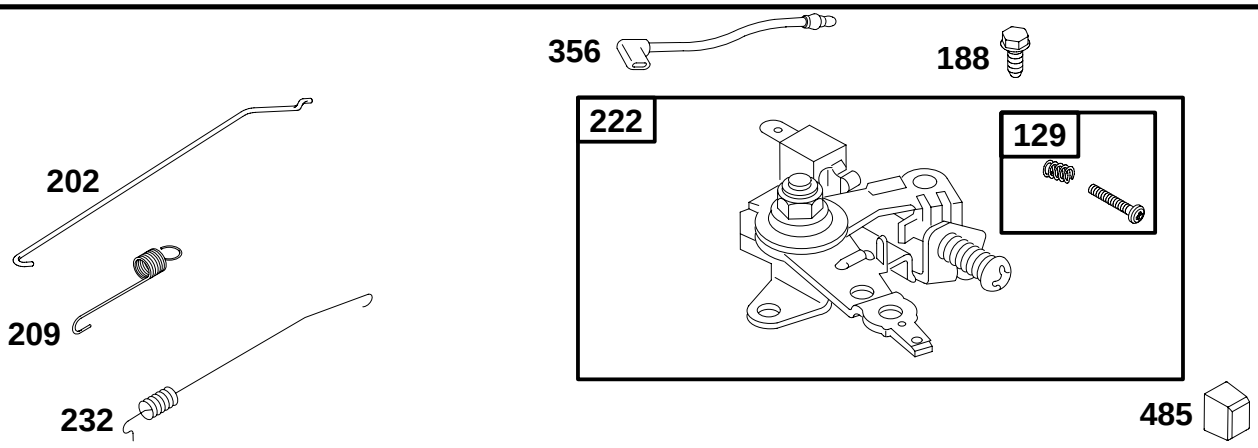

REF. NO.	PART NO.	DESCRIPTION
129	**715854**	Screw/Spring–Governor Speed Used on Type No(s). 0036, 0060, 0115, 0124, 0125. **–––––– Note –––––** **715909** Screw/Spring–Governor Speed Used on Type No(s). 0061, 0116, 0118, 0123. **xxxxxx**Screw/Spring–Governor Speed Used on Type No(s). 0120, 0127, 0130.
188	**711209**	Screw (Control Bracket)
202	**711206**	Link–Mechanical Governor
209	**711250**	Spring–Governor Used on Type No(s). 0036, 0060, 0115. **–––––– Note –––––** **711434** Spring–Governor Used on Type No(s). 0061, 0116, 0118, 0123. **711435** Spring–Governor Used on Type No(s). 0120. **711436** Spring–Governor Used on Type No(s). 0124, 0125. **711437** Spring–Governor Used on Type No(s). 0127. **711438** Spring–Governor Used on Type No(s). 0130.
222	**715855**	Bracket–Control Used on Type No(s). 0036, 0060, 0115, 0124, 0125. **–––––– Note –––––** **715904** Bracket–Control Used on Type No(s). 0061, 0116, 0118, 0123. **715905** Bracket–Control Used on Type No(s). 0120, 0127, 0130.
232	**711207**	Spring–Governor Link
356	**711203**	Wire–Stop
485	**692295**	Knob–Control

● Included in Carburetor Overhaul Kit–Ref. No. 121.
★ Included in Engine Gasket Set–Ref. No. 358.
◆ Included in Carburetor Gasket Set–Ref. No. 977.
∆ Included in Valve Gasket Set–Ref. No. 1095.

118400

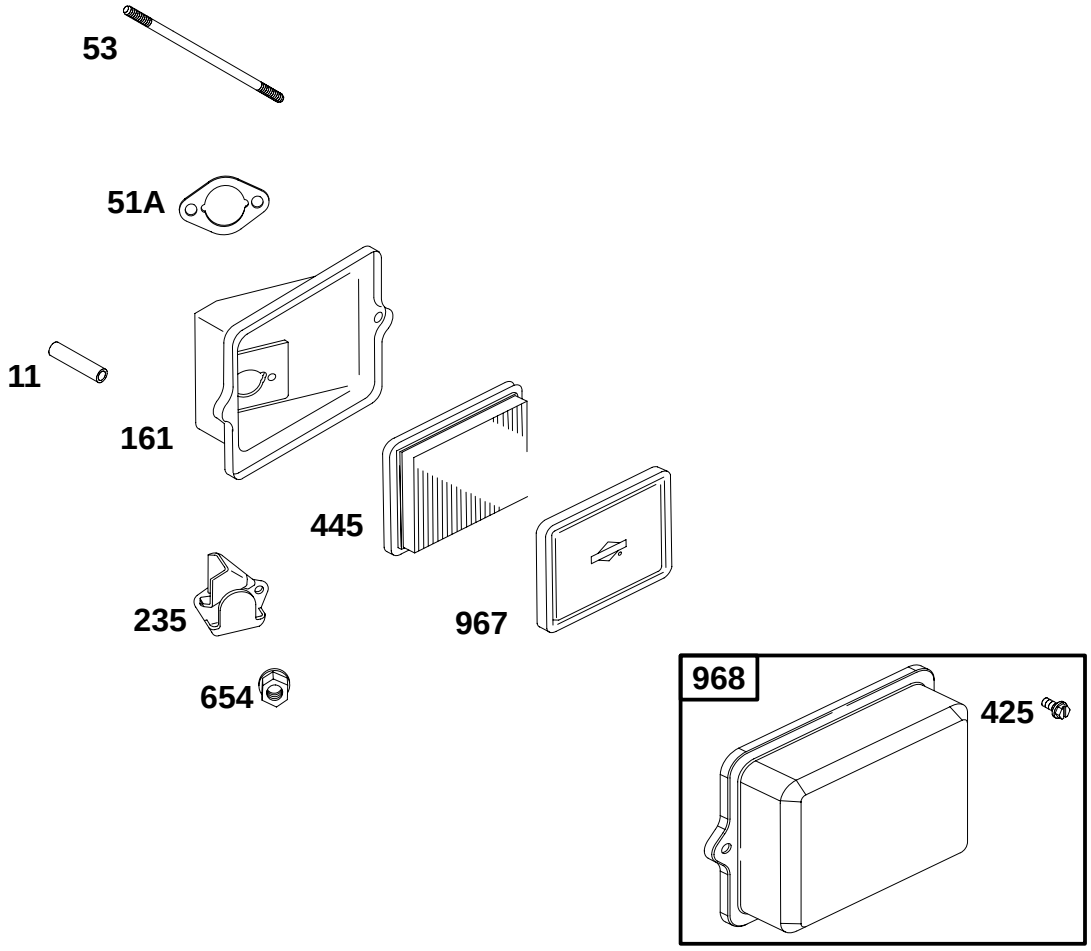

REF. NO.	PART NO.	DESCRIPTION
11	**710115**	Tube–Breather (Cut To Required Length)
51A•⋆♦△	**710639**	Gasket–Intake
53	**710148**	Stud (Carburetor)
161	**711198**	Base–Air Cleaner (Metal)
235	**710522**	Shield–Fuel Spray
425	**694515**	Screw (Air Cleaner Cover)
445	**491588**	Filter–Air Cleaner Cartridge
654	**710068**	Nut (Carburetor)
967	**491435**	Filter–Pre Cleaner
968	**692321**	Cover–Air Cleaner

● Included in Carburetor Overhaul Kit–Ref. No. 121.
⋆ Included in Engine Gasket Set–Ref. No. 358.
◆ Included in Carburetor Gasket Set–Ref. No. 977.
△ Included in Valve Gasket Set–Ref. No. 1095.

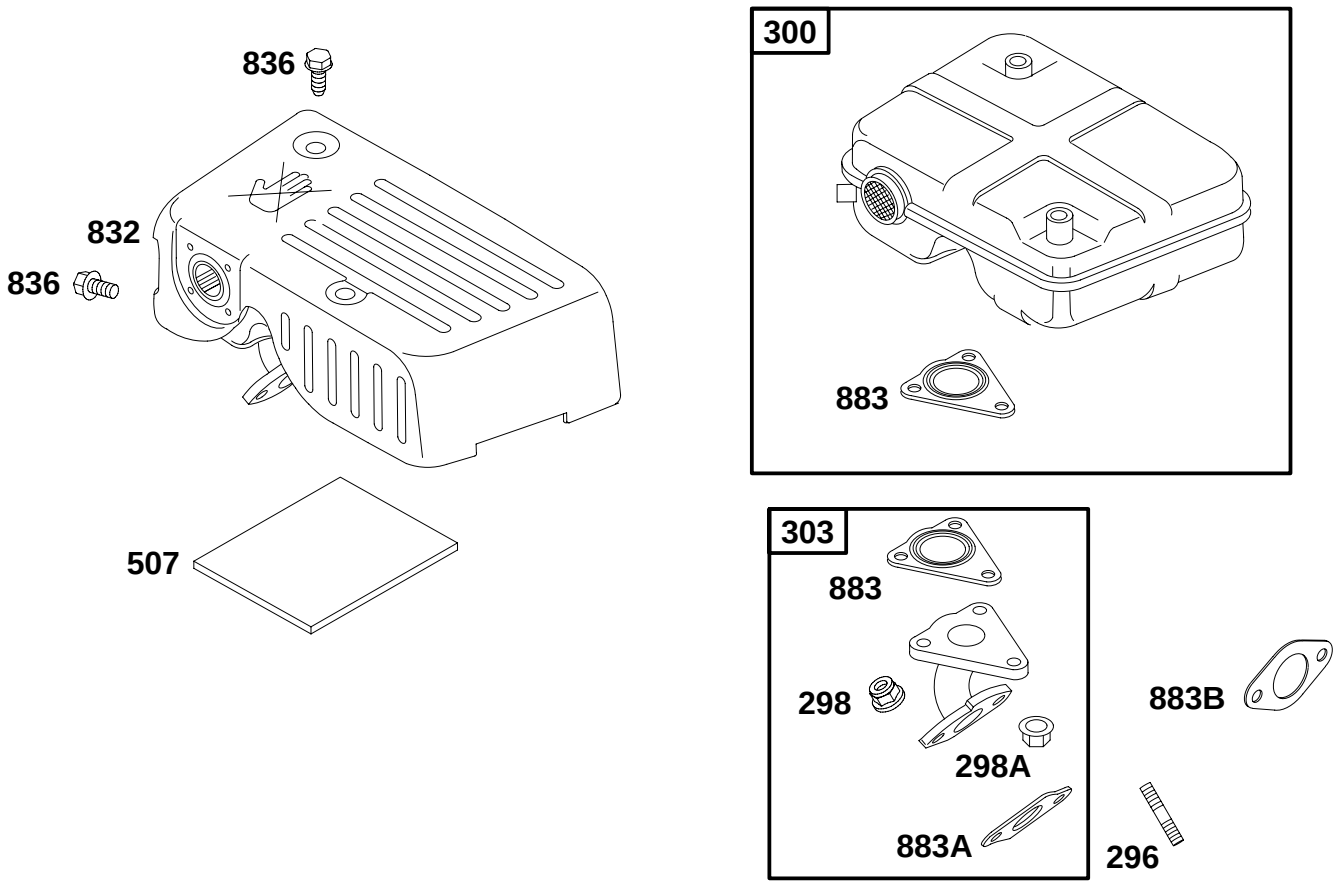

REF. NO.	PART NO.	DESCRIPTION
296	**710099**	Stud (Muffler)
298	**710090**	Locknut–Muffler/Elbow
298A	**710068**	Locknut–Muffler/Elbow
300	**711239**	Muffler
303	**715861**	Elbow–Exhaust
507	**711243**	Insulator
832	**711241**	Guard–Muffler
836	**710074**	Screw (Muffler Guard)
883	**∆★711245**	Gasket–Exhaust
883A	**∆★711244**	Gasket–Exhaust
883B	**710082**	Gasket–Exhaust
		Used on Type No(s). 0061, 0116.

● Included in Carburetor Overhaul Kit–Ref. No. 121.
★ Included in Engine Gasket Set–Ref. No. 358.
◆ Included in Carburetor Gasket Set–Ref. No. 977.
∆ Included in Valve Gasket Set–Ref. No. 1095.

118400

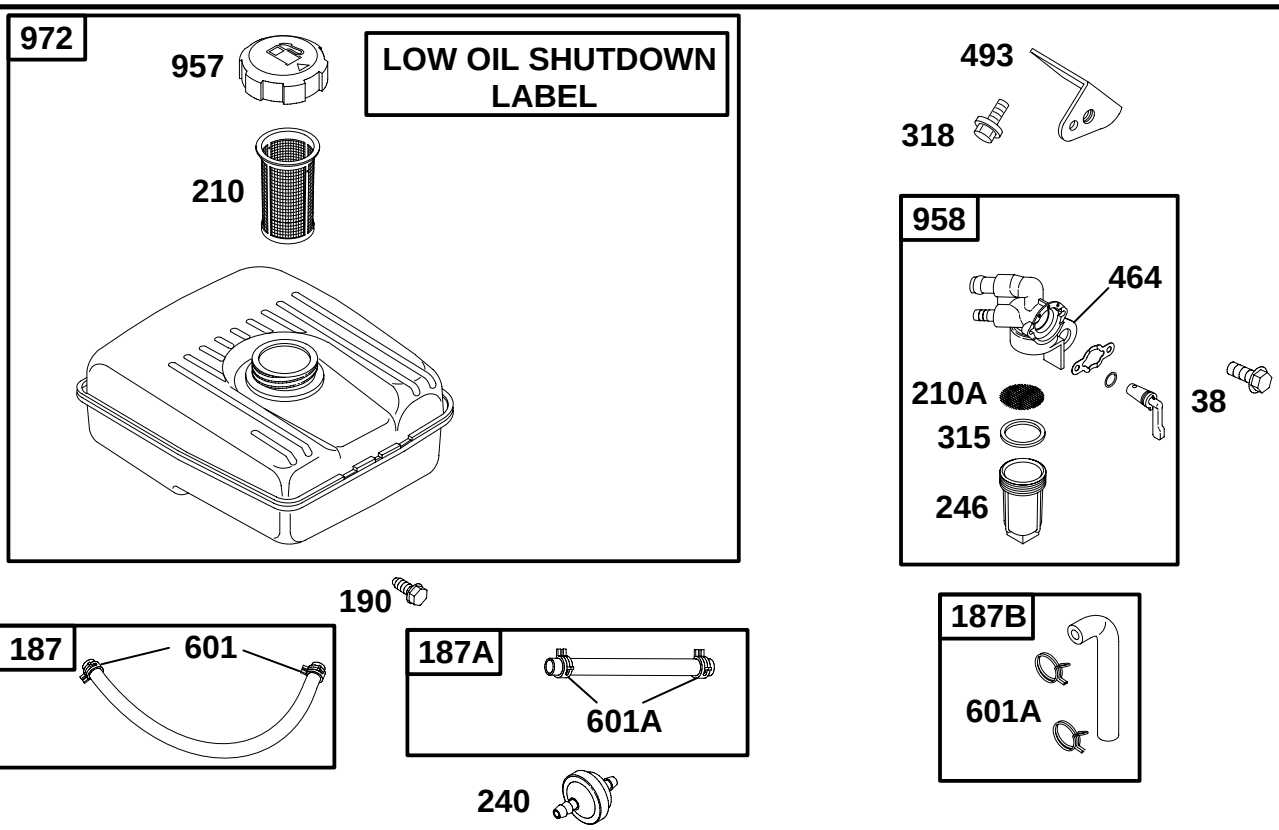

REF. NO.	PART NO.	DESCRIPTION
38	**710057**	Screw (Fuel Shut–Off Valve)
187	**715028**	Line–Fuel (8mm Inside Diameter) (Fuel Tank To Fuel Shut Off Valve)(Cut to Required Length) **–––––– Note ––––– 715908** Line–Fuel (8mm Inside Diameter) (Fuel Tank To Fuel Shut Off Valve)(Cut to Required Length) Used on Type No(s). 0118.
187A	**715029**	Line–Fuel (4mm Inside Diameter) (Fuel Shut Off Valve To Carburetor)(Cut to Required Length) (Used Before Code Date 02110100).
187B	**715902**	Line–Fuel (Formed Hose, 4mm Inside Diameter) (Fuel Shut Off Valve To Carburetor) (Used After Code Date 02103000).
190	**711216**	Screw (Fuel Tank)
210	**710065**	Strainer–Fuel
210A	**711218**	Strainer–Fuel
240	**298090**	Filter–Fuel Used on Type No(s). 0061.
246	**710070**	Bowl–Fuel Filter
315	**★710072**	Seal–O-Ring (Filter Bowl)
318	**710074**	Screw (Mounting Bracket)
464	**★710069**	Seal–O-Ring (Fuel Shut Off Valve)
493	**711219**	Bracket–Mounting
601	**710067**	Clamp–Hose
601A	**710075**	Clamp–Hose
957	**711215**	Cap–Fuel Tank (Plastic)
958	**715901**	Valve–Fuel Shut Off (Plastic) (Used After Code Date 02103000). **–––––– Note ––––– 715857** Valve–Fuel Shut Off (Plastic) (Used Before Code Date 02110100).
972	**715856**	Tank–Fuel (Plastic)

● Included in Carburetor Overhaul Kit–Ref. No. 121.
★ Included in Engine Gasket Set–Ref. No. 358.
◆ Included in Carburetor Gasket Set–Ref. No. 977.
Δ Included in Valve Gasket Set–Ref. No. 1095.

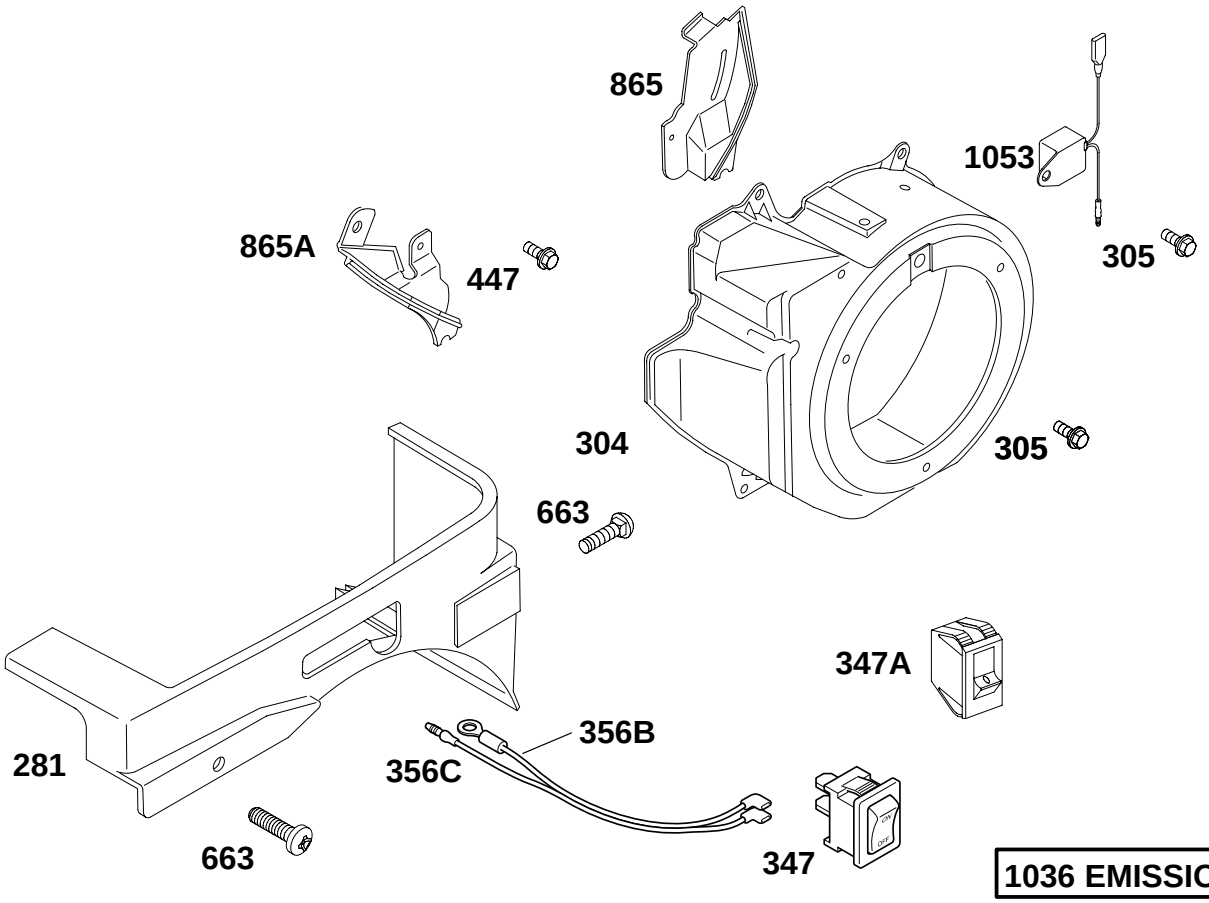

1036 EMISSIONS LABEL

REF. NO.	PART NO.	DESCRIPTION
281	**711248**	Panel–Control Used on Type No(s). 0036, 0060, 0115, 0118, 0124, 0125. **–––––– Note ––––––** **711433** Panel–Control Used on Type No(s). 0061, 0116, 0120, 0123, 0127, 0130.
304	**711210**	Housing–Blower
305	**710023**	Screw (Blower Housing)
347	**691995**	Switch–Rocker Used on Type No(s). 0061, 0116, 0120, 0123, 0127, 0130.
347A	**711439**	Switch–Rocker Used on Type No(s). 0118.
356B	**710087**	Wire–Stop Used on Type No(s). 0061, 0116, 0120, 0123, 0127, 0130.
356C	**710087**	Wire–Stop Used on Type No(s). 0061, 0116, 0120, 0123, 0127, 0130.
663	**711249**	Screw (Control Panel)
865	**711212**	Cover–Air Guide (Opposite Cylinder Head Side)
865A	**711213**	Cover–Air Guide (Cylinder Head Side)
1036	**711290**	Label–Emissions (Used After Code Date 99093000).
1053	**710305**	Module–Oil Gard®

● Included in Carburetor Overhaul Kit–Ref. No. 121.
★ Included in Engine Gasket Set–Ref. No. 358.
◆ Included in Carburetor Gasket Set–Ref. No. 977.
Δ Included in Valve Gasket Set–Ref. No. 1095.

118400

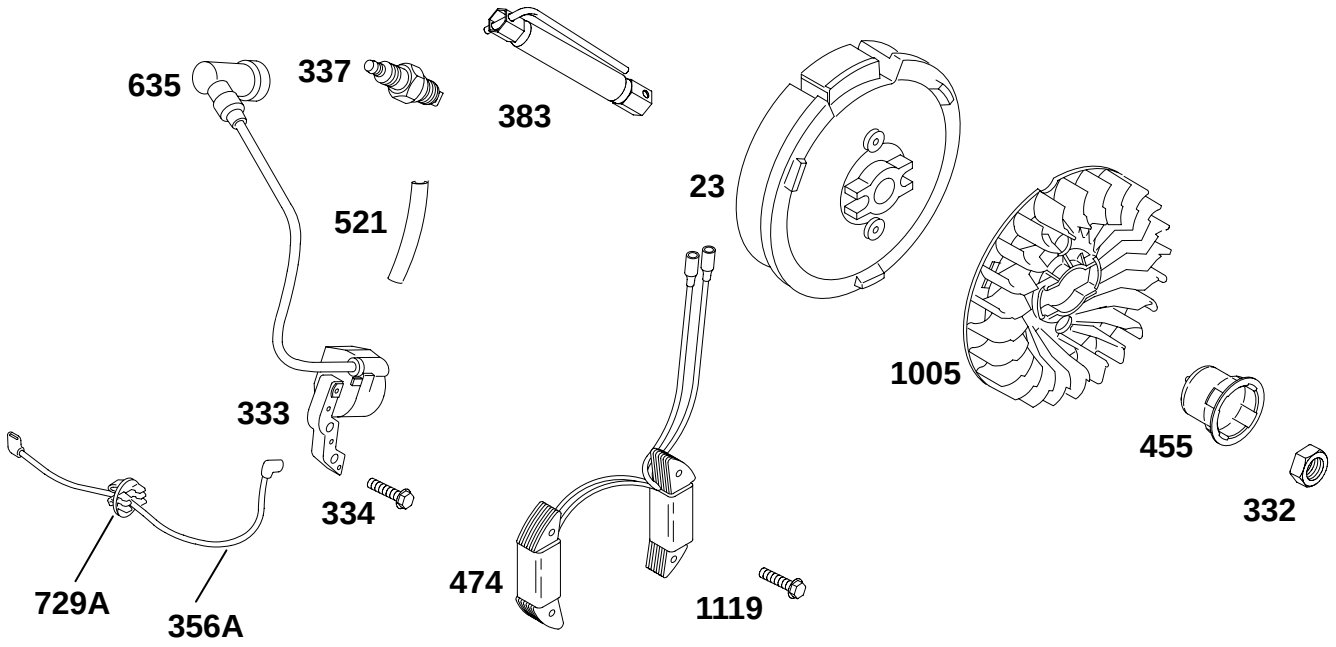

REF. NO.	PART NO.	DESCRIPTION
23	**711196**	Flywheel
		–––––––– Note –––––
		711440 Flywheel
		Used on Type No(s). 0115.
332	**710048**	Nut (Flywheel)
333	**711197**	Armature–Magneto
334	**711142**	Screw (Magneto Armature)
337	**711252**	Plug–Spark
356A	**710324**	Wire–Stop
383	**19374**	Wrench–Spark Plug
455	**711237**	Cup–Flywheel
474	**715255**	Alternator
		Used on Type No(s). 0115.
521	**711171**	Shield–Cable
635	**710634**	Boot–Spark Plug
729A	**710046**	Clip–Wire
1005	**711170**	Fan–Flywheel
1119	**710047**	Screw (Alternator)
		Used on Type No(s). 0115.

● Included in Carburetor Overhaul Kit–Ref. No. 121.
★ Included in Engine Gasket Set–Ref. No. 358.
◆ Included in Carburetor Gasket Set–Ref. No. 977.
∆ Included in Valve Gasket Set–Ref. No. 1095.

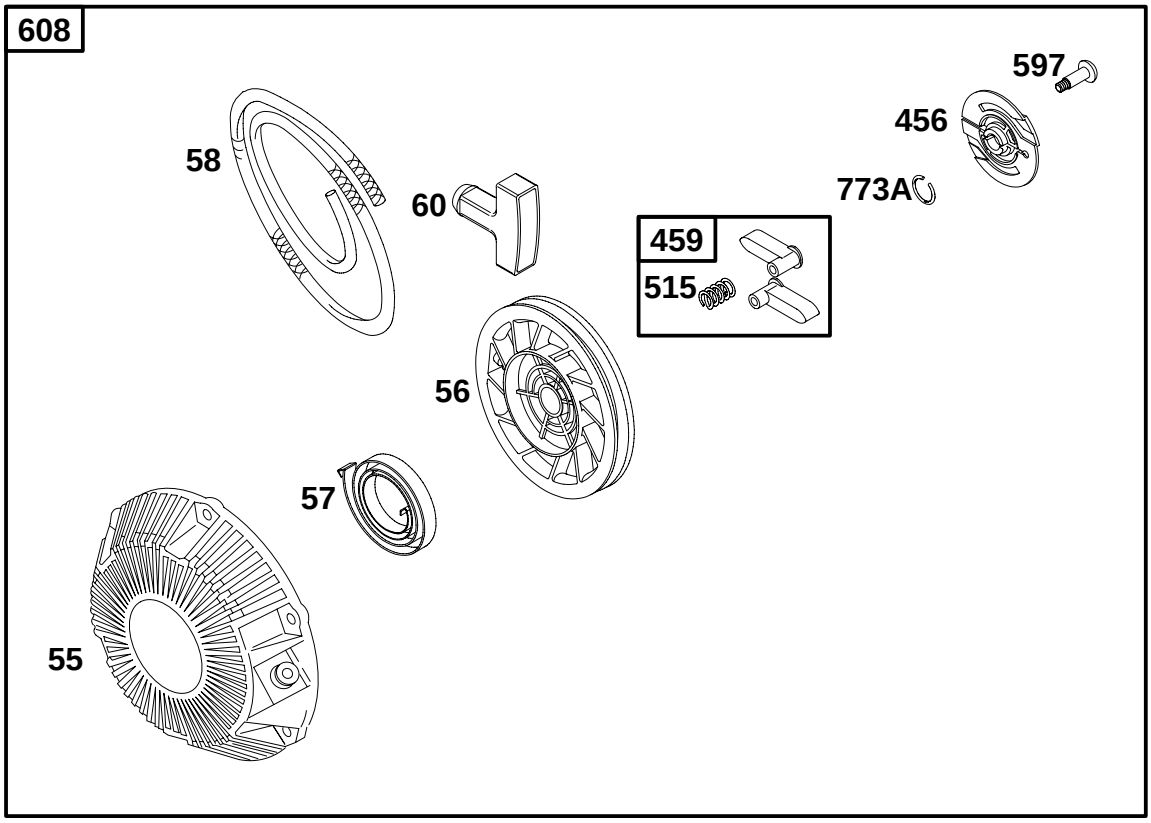

65

REF. NO.	PART NO.	DESCRIPTION
55	**711227**	Housing–Rewind Starter
56	**711231**	Pulley–Starter
57	**711229**	Spring–Rewind Starter
58	**711221**	Rope–Starter (Cut to Required Length)
60	**490652**	Grip–Starter Rope
65	**711222**	Screw (Rewind Starter)
456	**711233**	Plate–Pawl Friction
459	**715860**	Pawl–Ratchet
515	**691528**	Spring–Pawl
597	**711235**	Screw (Pawl Friction Plate)
608	**715859**	Starter–Rewind
773A	**711225**	Retainer

● Included in Carburetor Overhaul Kit–Ref. No. 121.
★ Included in Engine Gasket Set–Ref. No. 358.
◆ Included in Carburetor Gasket Set–Ref. No. 977.
Δ Included in Valve Gasket Set–Ref. No. 1095.

118400

1095 VALVE GASKET SET

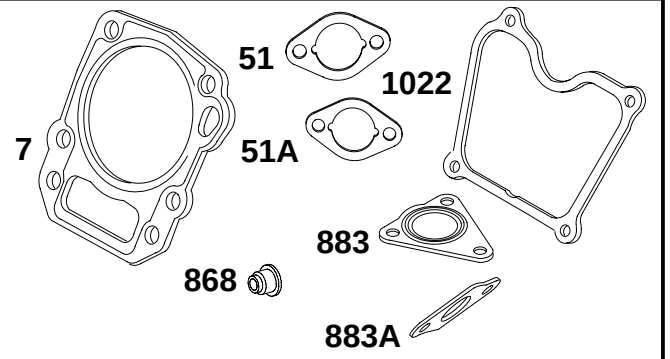

358 ENGINE GASKET SET

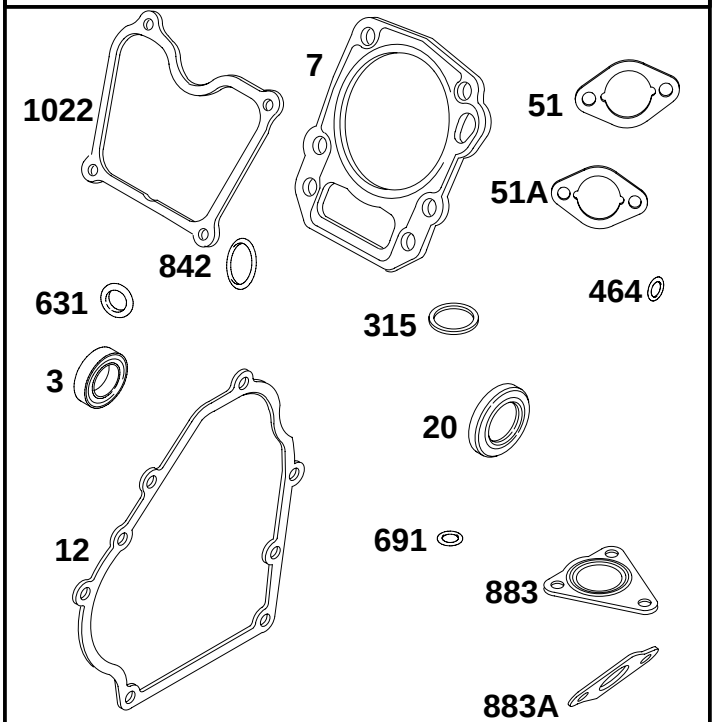

121 CARBURETOR OVERHAUL KIT

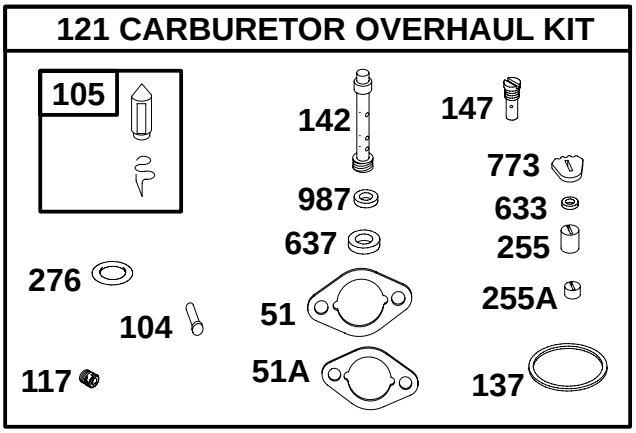

977 CARBURETOR GASKET SET

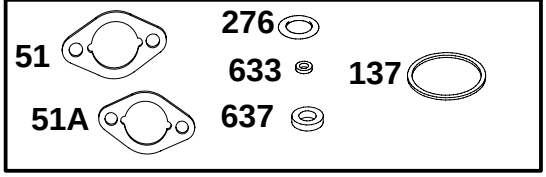

REF. NO.	PART NO.	DESCRIPTION
3	★711139	Seal–Oil (Magneto Side)
7	Δ★711129	Gasket–Cylinder Head
12	★711174	Gasket–Crankcase
20	★710031	Seal–Oil (PTO Side)
51	•★♦Δ710060	Gasket–Intake
51A	•★♦Δ710639	Gasket–Intake
104	●710195	Pin–Float Hinge
105	●715868	Valve–Float Needle
117	●711323	Jet–Main (Standard)
121	715874	Kit–Carburetor Overhaul
137	●◆711318	Gasket–Float Bowl
142	●711322	Nozzle–Carburetor (Standard)
147	●711315	Jet–Pilot
255	●710177	Bushing–Choke Shaft
255A	●710179	Bushing–Choke Shaft
276	●◆711319	Washer–Sealing (Sold in Kit Only)
315	★710072	Seal–O-Ring (Filter Bowl)
358	715875	Gasket Set–Engine
464	★710069	Seal–O-Ring (Shut Off Valve)
631	★711188	Washer (Oil Drain Plug)
633	●◆	Seal–Choke/Throttle Shaft (Sold in Kit Only)
637	●◆	Washer (Throttle Shaft, Sold in Kit Only)
691	★710055	Seal–Governor Shaft
773	●710175	Retainer
842	★710029	Seal–O-Ring (Dipstick Tube)
868	Δ711287	Seal–Valve
883	Δ★711245	Gasket–Exhaust
883A	Δ★711244	Gasket–Exhaust
977	715876	Gasket Set–Carburetor
987	●711324	Seal–Throttle Shaft
1022	Δ★711112	Gasket–Rocker Cover
1095	715877	Gasket Set–Valve

● Included in Carburetor Overhaul Kit–Ref. No. 121.
★ Included in Engine Gasket Set–Ref. No. 358.
◆ Included in Carburetor Gasket Set–Ref. No. 977.
Δ Included in Valve Gasket Set–Ref. No. 1095.