Instruction Manual and Replacement List

BAUER COMPRESSORS

CFS

CFS-2S, CFS-2M, CFS-3S, CFS-3M
Containment Fill Stations

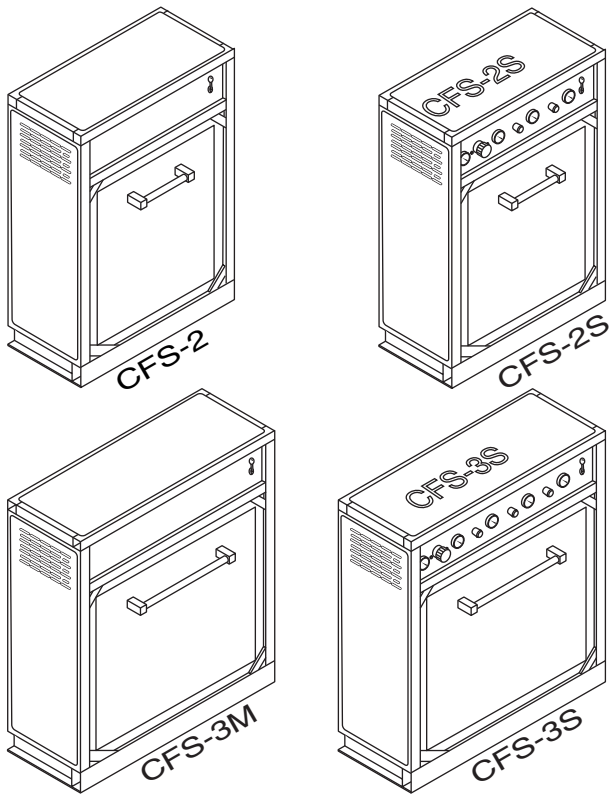

January 2002

MNL-0256

BAUER Compressors, Inc.
1328 Azalea Garden Road
Norfolk, Virginia 23502-1944

Phone: (757) 855-6006
Fax: (757) 855-6224
www.bauercomp.com

BAUER
COMPRESSORS

Changes and Revisions

Change #	Date	Notes	Approval
First Edition	May 1998		JB
1	February 1999	Design Updates	JH
2	December 1999	ECN-3356 Standard Fill Hose	JH
2nd edition	October 2001	AR 2043 and format	JH
1	January 10, 2002	Change from Containment Type Fill Station to Containment Fill Station	JB

Change #	Effected Pages		Change #	Effected Pages
1	6,7-11,13-17, 29,31,33,35,37,39,41-45			
1	46 & 47 entire new pages			
2	RPL Figure - 10, Page 36			
2nd edition	11			
1	Covers, 4, 6, 8, 9, 11, &12			

Para.	Title	Page

1.0 INTRODUCTION 4

2.0 OPERATING AND SAFETY PRECAUTIONS 5
2.1 General Safety Precautions 5
2.2 Safety Warnings 5

3.0 GENERAL 6
3.1 Description 6
3.2 Descriptive Data 6
3.3 Fill Station Air Flow 8
3.3.1 Containment Fill Stations CFS-2S and CFS-3S 8
3.3.2 Containment Fill Stations CFS-2M and CFS-3M 9

4.0 UNPACKING AND HANDLING 10
4.1 Shipping and Handling 10
4.2 Installation of the Fill Station 10

5.0 OPERATION AND MAINTENANCE 11
5.1 Description 11
5.2 Operation 11
5.3 Remote Fill Connection 12
5.3.1 Connecting an Air Bottle 13
5.3.2 Filling the Air Bottle 13
5.3.3 Removing the Air Bottle 13
5.3.4 Operating the Cascade Panel (Optional) 13

6.0 MAINTENANCE 14
6.1 Pressure Gauges 14
6.2 Safety Valves 14
6.2.1 Pneumatic Connections 14
6.2.2 Flange Mounted Ball Bearings for Bottle Door Pivot 15
6.2.3 Pressure Hoses 15
6.2.4 Fill Station Door Interlock Mechanism 15

7.0 TABLES 16
7.1 Torque Values 16
7.2 Lubricants Chart 16
7.3 PSI to BAR Conversion Table 17
7.4 oF to oC Conversion Table 17
7.5 Conversion Formulas 17

8.0 ANNEX 18
A REPLACEMENT PARTS LIST 21

Figure. Title Page

Figure 1 CFS Major Components 7
Figure 2 Lifting Devices 10
Figure 3 Bottle Spacing Rings 11
Figure 4 Bottle Valve Sequences 12
Figure 5 Safety Valves 14
RPL Figure - 1 CFS-2M Frame Assembly 22
RPL Figure - 2 CFS-2S Frame Assembly....24
RPL Figure - 3 CFS-3M Frame Assembly 26
RPL Figure - 4 CFS-3S Frame Assembly....28
RPL Figure - 5 CFS-2M Control Panel 30
RPL Figure - 6 CFS-2S Fill Control Panel 31
RPL Figure - 7 CFS-3M Control Panel 32
RPL Figure - 8 CFS-3S Fill Control Panel 33
RPL Figure - 9 Pneumatic Controls and Actuators 34
RPL Figure - 10 Standard Fill Hose Assembly 36
RPL Figure - 11 Dual Fill Hose Assembly....37
RPL Figure - 12 Remote Fill Hose Assembly (Optional)....38
RPL Figure - 13 Cascade Panel (Optional)....39
RPL Figure - 14 Cascade Panel with 3 Way Valve (Optional) 40
RPL Figure - 15 Cascade Panel with Remote Fill (Optional) 41

1.0 INTRODUCTION

- This manual contains operating instructions for Containment Fill Stations, manufactured by Bauer Compressors, Inc. of Norfolk, Virginia, USA.
- All instructions in this manual should be observed and carried out as written to prevent damage and premature wear to the equipment and the units served by it.
- If these operating instructions are not followed and/or changes are made to the unit without prior written authorization, including the use of maintenance parts not supplied by Bauer, any claims under warranty shall be void. Please contact our customer service department at the numbers listed on the front of this manual should you need any further assistance.
- While every effort is made to ensure the accuracy of the information contained in this manual, Bauer will not, under any circumstances, be held accountable for any inaccuracies or the consequences thereof.
- Information contained in this manual is subject to change or revision without notice or obligation.

2.0 OPERATING AND SAFETY PRECAUTIONS

2.1 General Safety Precautions

- Read the operating manual before installing or operating the machine, and always follow appropriate handling, operation and maintenance procedures. The maintenance plan contains measures required to keep the unit in good condition. Maintenance is simple, but must be executed regularly to achieve safe operation, maximum efficiency and long service life.

- Consult and follow all OSHA, NEMA, ASME and local regulations, laws and codes covering the installation and operation of this fill station and accessories before operating the unit.

- The unit must be installed, operated, maintained and repaired only by authorized, trained and qualified personnel.

- Do not operate this unit in excess of the conditions set forth in this manual. Doing so may subject the unit to limits which it is not designed to withstand.

- If any of the provisions contained in this list (especially concerning safety) do not comply with local provisions of law, the safer provision must be applied.

- Limits (pressure values, time settings, etc.) must be permanently marked.

- Do not play with compressed air. Pressurized air can cause serious injuries.

- The operator is responsible for keeping the unit in safe operating condition. If parts and accessories are not considered to be reliable for safe operation, they must be replaced immediately.

- Periodically check all safety devices, including pressure gauges, to make sure the system is operating within the proper limits.

- Keep the operating manual available for the operators, and take care that operation and maintenance are performed according to the instructions. Enter all operating data, executed maintenance measures, etc. in a log. Observe all relevant safety provisions.

- Failure to follow any of these warnings may result in an accident causing personal injury or property damage.

2.2 Safety Warnings

- The use of repair parts other than those included within the Bauer approved parts list may create hazardous conditions over which Bauer has no control. Such hazardous conditions can lead to accidents that may be life-threatening, cause substantial bodily injury, and/or result in damage to the equipment. Therefore, Bauer Compressor, Inc. can bear no responsibility for equipment in which non-approved repair parts are installed.

- The use of plastic pipe or rubber hose in place of steel tube or iron pipe; soldered joints; or failure to insure system compatibility of flex joints and flexible hose can result in mechanical failure, property damage, and serious injury or death.

3.0 GENERAL

3.1 Description

The Containment Fill Stations Model CFS-2S; -2M; -3S; or -3M are designed to be used in conjunction with an air-storage system and /or an air-compressor to recharge air bottles.

The Model Designations for the Containment Fill Stations are as follows: -2 or -3 indicates the number of fill positions in the unit. The M (Module) version is for use in conjunction with a separate fill panel and is ideal for mobile applications where separate modules may be necessary or where the customer already has a fill control panel. The S (Stand-alone) version is equipped with its own fill panel and can be used for stationary or mobile operations.

For safety reasons all models of the Containment Fill Stations will not fill the bottles until the door is closed and locked.

3.2 Descriptive Data

Model	Fill Positions	Description	Weight
CFS-2S[1]	2	Containment Fill Station for indoor fixed installation.	760 lbs
CFS-3S[1]	3		910 lbs
CFS-2M[2]	2	Containment Fill Station for mobile or indoor installation and usage in conjunction with a separate fill panel.	750 lbs
CFS-3M[2]	3		900 lbs

1 A mounted Cascade Panel for cascade fill is available as optional equipment.
2 A deeper version allowing horizontal bottle loading is available as an option.

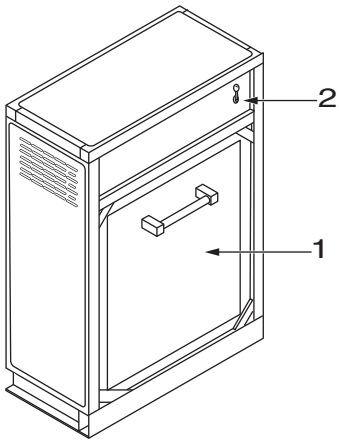

1 Fill Station Door
2 Door Latching Control Lever

CFS-2M

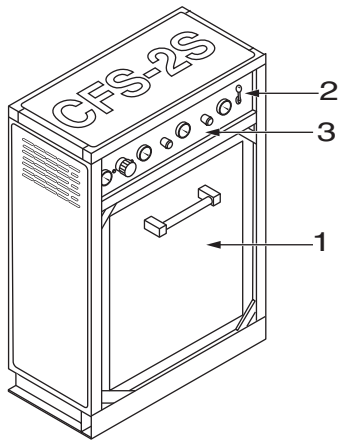

1 Fill Station Door
2 Door Latching Control Lever
3 Fill Control Panel

CFS-2S

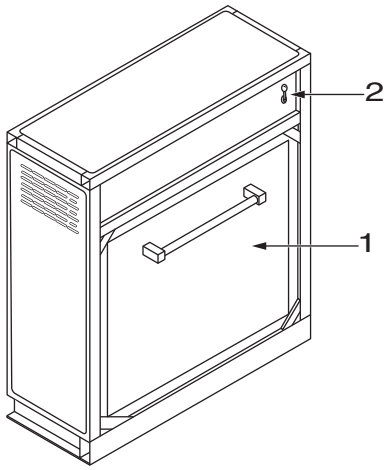

1 Fill Station Door
2 Door Latching Control Lever

CFS-3M

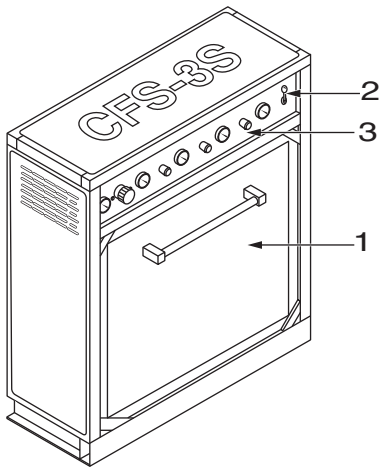

1 Fill Station Door
2 Door Latching Control Lever
3 Fill Control Panel

CFS-3S

Figure 1 CFS Major Components

3.3 Fill Station Air Flow

Refer to the Pneumatic Diagrams in the Annex, Section 6. DGM-0842 applies to the CFS-2S and -3S and DGM-0841 is for the CFS-2M and -3M

3.3.1 Containment Fill Stations CFS-2S and CFS-3S

From the air inlet, compressed air flows to the Fill Pressure Regulator (R2) where the desired bottle fill pressure is set and maintained. The Regulator Outlet Pressure Gauge (P2) indicates this regulated pressure.

The Fill Station Door automatic latching procedure begins when compressed air pressure from the Fill Pressure Regulator (R2) is applied to the Pneumatic Control Air Pressure Regulator (R1). Compressed air at lower pressure than is required to fill bottles then flows to the Door Locking Valve (V4) and the Door Position Valve (V5).

The Door Position Valve (V5) is actuated when the operator closes the Fill Station Door. The operator moves the Door Locking Control Lever which actuates the Door Locking Valve (V4) to select the door Locked or Unlocked. When the operator selects Locked, air pressure is applied to the Pneumatic Cylinders Actuating Valve (V6).

The Pneumatic Cylinders Actuating Valve (V6) applies compressed air pressure to the two Pneumatic Cylinders (CYL1) which mechanically latch the door.

The action of latching the door also mechanically operates two Safety Interlock Actuator Valves (V3). Once both Safety Interlock Actuator Valves (V3) are actuated, compressed air pressure flows from the Door Locking Valve (V4) through both Safety Interlock Actuator Valves (V3) to actuate the Safety Interlock Fill Shut-off Valve (V2).

When the Safety Interlock Fill Shut-off Valve (V2) is operated it allows compressed air to flow from the outlet of the Fill Pressure Regulator (R2) to the Fill Hose (H1) via the Fill Hose Shut Off Valve (V7).

Fill Pressure Gauge (P3) is used to monitor the progress of the recharging operation.

When the recharging operation is complete the operator moves the Door Locking Valve (V4) to the Unlocked position and starts a sequence of events which ensures that the door cannot be opened before high pressure compressed air stops flowing to the bottle(s).

When the operator moves the Door Locking Control Lever to the Unlocked position, the Door Locking Valve (V4) removes the pressure from the Pneumatic Cylinder Actuating Valve (V6) which releases the Safety Interlock Actuator Valves (V3) which in turn allows the Safety Interlock Fill Shut Off Valve (V2) to close and stop high pressure air flow to the Fill Hose (H1). Moving the Door Locking Valve (V4) to Unlocked also vents compressed air from the Pneumatic Cylinder Actuating Valve (V6) which causes the Pneumatic Cylinder to mechanically unlatch the door. Only then can the operator open the door. Before the bottle(s) can be removed from the fill station the Fill Hose Shutoff Valve (V7) and the bottle valve must be closed and the pressure remaining in the Fill Hose (H1) bled off by opening the Drain/Bleed Valve (V1)

3.3.2 Containment Fill Stations CFS-2M and CFS-3M

From the door interlock inlet, compressed air flows to the Pneumatic Control Air Pressure Regulator (R1) where the desired bottle fill pressure is set and maintained.

The Fill Station Door automatic latching procedure begins when compressed air pressure is applied to the Pneumatic Control Air Pressure Regulator (R1). Compressed air at lower pressure than is required to fill bottles then flows to the Door Locking Valve (V4) and the Door Position Valve (V5). The Door Position Valve (V5) is actuated when the operator closes the Fill Station Door.

The operator moves the Door Locking Control Lever which actuates the Door Locking Valve (V4) to select the door Locked or Unlocked.

When the operator selects Locked, air pressure is applied to the Pneumatic Cylinders Actuating Valve (V6). The Pneumatic Cylinders Actuating Valve (V6) applies compressed air pressure to the two Pneumatic Cylinders (CYL1) which mechanically latch the door.

The action of latching the door also mechanically operates two Safety Interlock Actuator Valves (V3). Once both Safety Interlock Actuator Valves (V3) are actuated, compressed air pressure flows from the Door Locking Valve (V4) through both Safety Interlock Actuator Valves (V3) to actuate the Safety Interlock Fill Shut-off Valve (V2).

When the Safety Interlock Fill Shut-off Valve (V2) is operated, it allows compressed air to flow from the outlet of the Pneumatic Control Air Pressure Regulator (R1) to the Fill Hose (H1).

When the recharging operation is complete the operator moves the Door Locking Control Lever which actuates the Door Locking Valve (V4) to the Unlocked position and starts a sequence of events which ensures that the door can not be opened before high pressure compressed air stops flowing to the bottle(s).

Moving the Door Locking Valve (V4) to the Unlocked position removes the pressure from the Pneumatic Cylinder Actuating Valve (V6) which releases the Safety Interlock Actuator Valves (V3) which in turn allows the Safety Interlock Fill Shut Off Valve (V2) to close and stop high pressure air flow to the fill hose (H1).

Moving the Door Locking Valve (V4) to Unlocked also vents compressed air from the Pneumatic Cylinder Actuating Valve (V6) which causes the Pneumatic Cylinder to mechanically unlatch the door. Only then can the operator open the door. Before the bottle(s) can be removed from the fill station the bottle valve must be closed and the pressure remaining in the Fill Hose (H1) bled off by opening the Drain/ Bleed Valve (V1).

4.0 UNPACKING AND HANDLING

4.1 Shipping and Handling

This fill station is packaged according to the requirements for shipping via the requested type of carrier service. It is possible that the fill station could have been damaged during shipping. For this reason, we urge you to thoroughly examine the unit for possible damage and report any such damage to the shipping company immediately.

Care must be taken in unpacking the fill station. Serious damage could result by not checking for clearance between the item to be unpacked and the packaging to be removed. Handling of the unpacked fill station should be performed only by the following methods

CAUTION
Be sure that the lifting devices are capable of handling the weight of the unit (see Section 2 for the weight of the fill station). Before lifting the unit, secure all loose or swinging parts to keep them from moving. Stay clear of lifted load.

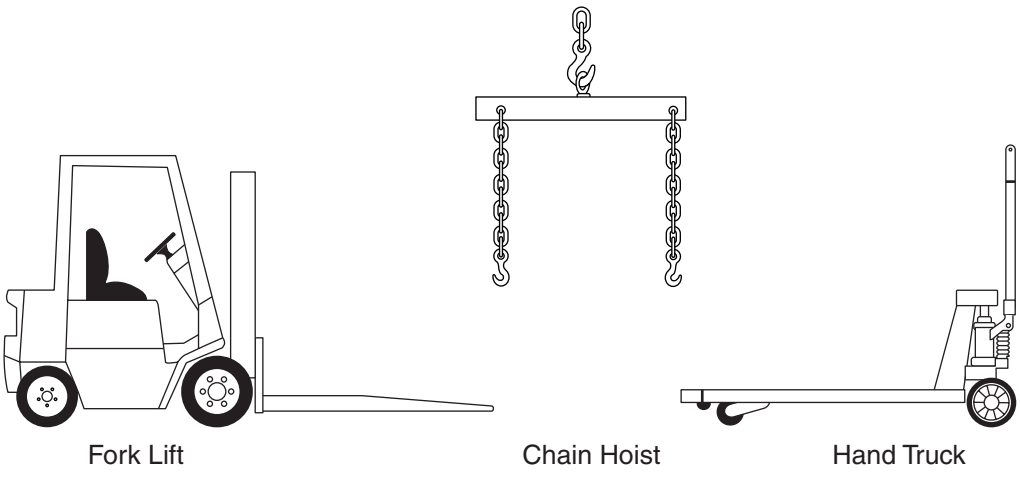

Figure 2 Lifting Devices

4.2 Installation of the Fill Station

For installation observe the following:

- The floor must be capable of supporting the weight of the unit.
- Position the unit so that it is level.
- For added safety, you must bolt the unit to the floor and if possible bolt it to the wall using standoffs/extenders.
- In the event of a bottle failure, a substantial amount of energy will be rapidly released. For this reason the fill station must be mounted with a four inch standoff/extender from the wall and provisions must be made for blow out venting behind the unit.

5.0 OPERATION AND MAINTENANCE

This system is capable of operating with pressures in excess of the normal bottle fill pressure. It is important not to overfill bottles as explosive forces may be released if the bottle fails. For this reason only the most reliable, trained personnel should be delegated this responsibility.

Every bottle is stamped with a maximum pressure and the last inspection date. Do not fill a bottle with an outdated inspection stamp.

Visually inspect each bottle and valve for signs of damage before filling. Do not fill any bottles which appear to be damaged. See ASME and DOT regulations and manufacturer's recommendations for damage criteria. Be sure the regulator and safety valves are properly set.

5.1 Description

The containment fill stations are similar in design to other Bauer Compressor Fill Stations which have been tested and offer the operator protection against the explosive force and resulting shrapnel should a cylinder fail during the filling operation.The fill station features scuff guard strips, fill hoses complete with bleed valves and SCBA fill adapters of choice, pneumatic fill door safety interlock, and on the - 2S and -3S a fill control panel with individual pressure gauges. A remote fill hose connection is optional with the cascade option only.

5.2 Operation

1. Unlock the fill station door by moving the fill station door locking control lever to the UNLOCKED position and then pull the door open by means of the provided handle.
2. Insert the proper size spacer ring, supplied with your system, into the bottom of the bottle holder to adjust the height of your SCBA bottle (Figure 3). Different SCBA bottles have different lengths. A proper height adjustment will leave the bottle valve slightly below the rim of the bottle holder.

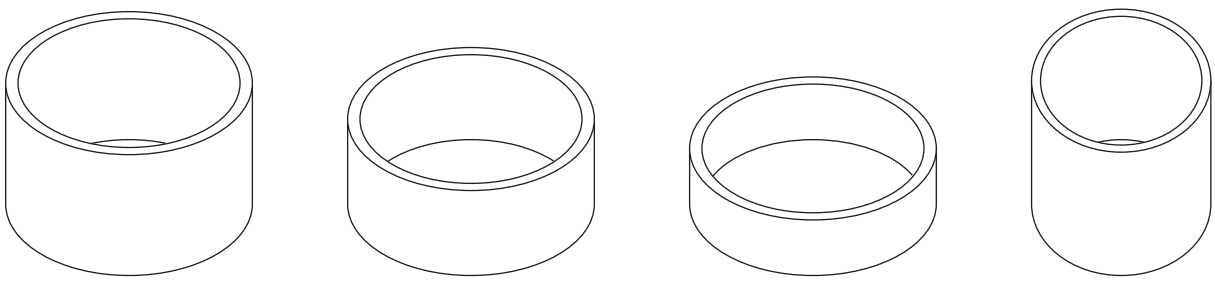

Figure 3 Bottle Spacing Rings

CAUTION
Minimum bend radius for the fill hose is 1½ inches. Less than this will cause damage to or failure of the fill hose. Place the bottle so that the bend radius of the hose is greater than 1½ inches.

3. Place the bottle(s) to be filled into the holder and connect the fill adapter(s) to the bottle(s) to be filled.
4. Close the hose bleed valve(s) and open the bottle valve(s).

5. Close and lock the fill station door by moving the fill station door locking control lever to the LOCKED position.

NOTE
The Containment Fill Stations will not fill the bottles unless the door is closed and locked

6. By closing the door, the bottle holders are returned to their upright position.
7. Set the regulator to the appropriate fill pressure. (-2S and -3S only)
8. Open the fill valve(s) to fill the bottle(s).
9. The pressure indication on the fill pressure gauge will drop while bottles are filling. Filling is completed when the fill pressure gauge reaches the desired pressure. (-2S and -3S only)
10. Close the fill valve(s).
11. Unlock the fill station door by moving the fill station door locking control lever to the UNLOCKED position.
12. Open the fill station door. The bottles are now in a tilted position.
13. Close the bottle valve(s) and open the fill hose bleed valve(s).
14. Remove the fill adapter(s) from the filled bottle(s) and connect them to the hose holder(s)

.

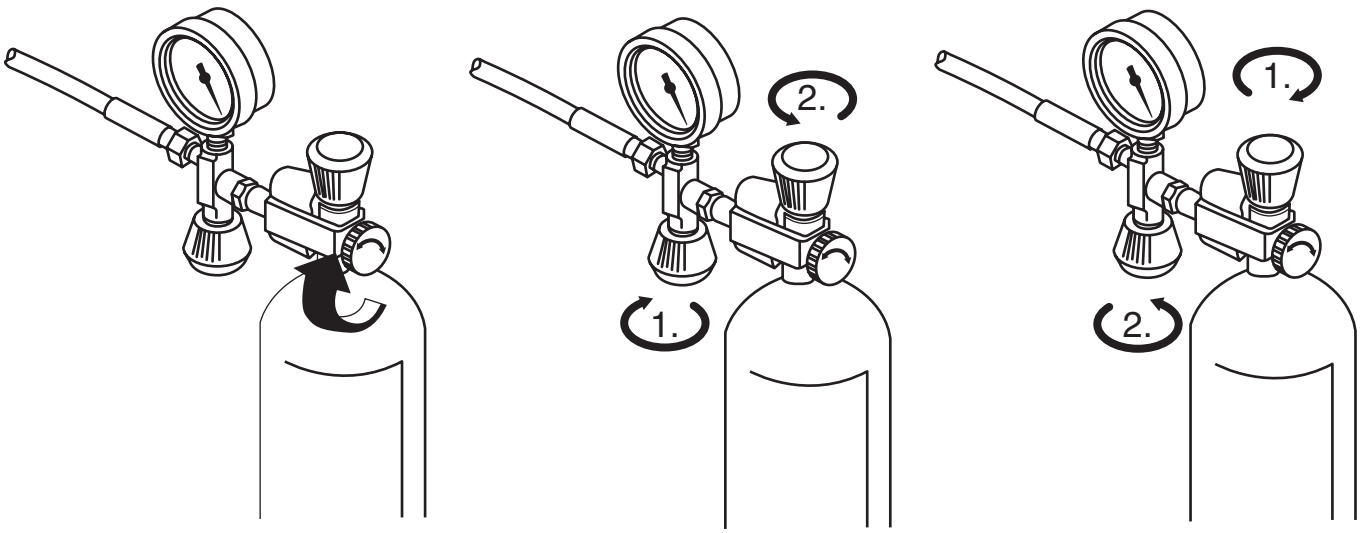

Attaching the fill yoke to the bottle. Opening sequence for filling bottle. Closing sequence after filling bottle.

Figure 4 Bottle Valve Sequences

5.3 Remote Fill Connection[1]

The remote fill can be rated for up to 6000 psi service. The remote fill is located on the left side of the cascade panel.

1. optional accessory

5.3.1 Connecting an Air Bottle

Connect to the air bottle valve using a fill hose with the CGA-346 fill adapter for 2216 psi bottles, a CGA-347 adapter for 4500 psi bottles or a SCUBA yoke for SCUBA bottles. The CGA-347 fill adapter seals on 4500 psi rated bottle valves, but vents on lower rated pressure bottles. CGA valves should be hand tightened only.

5.3.2 Filling the Air Bottle

1. Close the bleed valve on the fill hose (1) (Figure 4).
2. Open the filling valve on the fill panel to the filling position.
3. Adjust the regulator on the fill panel to the desired pressure.
4. Open the bottle valve (2). The bottle will fill.

5.3.3 Removing the Air Bottle

1. After reaching the desired bottle pressure, close the bottle valve.
2. After the bottle valve is closed, close the filling valve located on the fill panel.
3. Open the bleed valve (2) to vent the residual pressure in the fill hose.
4. Disconnect the fill adapter from the air bottle valve.

5.3.4 Operating the Cascade Panel (Optional)

1. If the panel is equipped with the 3-way ball valve select the input air pressure source.[1]
2. Filling from a compressor is best suited to “topping off” bottles.
3. Filling from air storage is best suited for multiple and cascade bottle fillings.
4. For cascade filling from air storage, open the desired bank valve. Use the fill pressure regulator to adjust the fill pressure to the desired pressure.
5. Open the fill valve(s) to fill the bottle(s). The pressure indication on the fill pressure gauge will drop while the bottles are filling.
6. When the fill pressure gauge returns to the desired pressure, filling is completed.
7. If the pressures between the bank and the fill gauge equalize before the desired fill pressure is reached, close the bank valve in use and open another bank valve. Repeat this procedure as necessary.
8. Close the bank valve and the fill valve(s).
9. Move the door locking control lever to UNLOCKED and open the safety door.
10. Close the bottle valve(s) and open the fill hose bleed valve(s).
11. Remove the fill adapter(s) from the filled bottle(s) and connect them to the hose holder(s).

1. Optional Accessory

6.0 MAINTENANCE

6.1 Pressure Gauges

Observe the pressure gauges daily. If the readings of any of the gauges seem to be incorrect, bleed off all system pressure. Check that the gauges correctly read zero then reapply pressure to the system. If the reading is still incorrect contact Bauer Compressors for service. All broken or damaged gauges must be replaced immediately.

6.2 Safety Valves

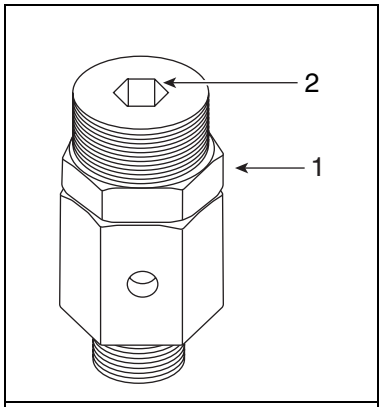

Figure 5 Safety Valves

Develop a regular program of visual inspection, looking for clogged drains and broken or missing parts.

Excessive operation of the safety valve can provide a means for leakage. Safety valves should be operated only often enough to assure that they are in good working order.

Test the valve every two to six months (depending on the environmental conditions) by raising the system pressure to the valve's set pressure or by operating the hand lever,[1] allowing it to open and reset as it would in normal service. Do not hand operate the valve with less than 75% of the stamped set pressure exerted on the safety valve. When hand operating, hold the valve in an open position long enough to purge accumulated foreign material from the seat area and then allow the valve to snap shut. Do not paint, oil or otherwise cover any interior or working parts of any safety valve. They do not require any lubrication or protective coating to work properly.

When safety valves require repair, service adjustments or set pressure changes, work shall be accomplished by the manufacturer or holders of "V", "UV" and/or "VR" stamps.

6.2.1 Pneumatic Connections

WARNING

Maintenance of pipe and tubing connections should not be attempted while the unit is under pressure. Serious injury or equipment damage will result if the connection fails or is loosened.

1. Safety valve with hand lever is optional.

After determining that a pneumatic connection is leaking. Relieve compressed air pressure and tighten ***just firmly enough*** so that leakage is stopped (finger tight plus up to an additional 1/2 turn as necessary). Please note that the compression type coupling fittings are capable of exerting extreme force on the tubing and should not be tightened more than is required to seal the joint. To improve the sealing of the pipe connections and to facilitate installation, the following should be observed:

Apply a thin layer of Never-Seez NSWT or equivalent on the outside of the ferrule during assembly.

Lubricate the threads of the connector with Never-Seez NSWT or a similar PFTE base lubricant to facilitate future disassembly.

6.2.2 Flange Mounted Ball Bearings for Bottle Door Pivot

There is no need for relubrication under normal conditions.

If the setscrews should become loose, tighten as follows: 22

Setscrew diameter	Hex size	Recommended torque (inch lbs)
6mm	3mm	87
5/16”	5/32”	165

6.2.3 Pressure Hoses

The hoses should be inspected periodically for wear and damage. If a hose is worn or damaged, remove and replace it.

6.2.4 Fill Station Door Interlock Mechanism

Should the fill station interlock mechanism become jammed, the door should unlock when all pressure is vented. On the -2S and -3S this can be accomplished by turning the regulator on the fill station control panel counter-clockwise until the regulated pressure gauge reads zero.

7.0 TABLES

7.1 Torque Values

NOTE
Unless otherwise specified in text, the following tightening torque values apply. The indicated torque values are valid for bolts in greased condition. Replace self-retaining nuts on reassembly.

Pipe connections (swivel nuts): Tighten just firmly enough so that leakage is stopped (finger tight plus up to an additional 1/2 turn as necessary)

Bolt or screw	Thread	Max. torque
Hex and socket head	1/4” (M 6)	7 ft. lbs. (10 Nm)
Hex and socket head	5/16” (M 8)	18 ft. lbs. (25 Nm)
Hex and socket head	3/8” (M 10)	32 ft. lbs. (45 Nm)
Hex and socket head	1/2” (M 12)	53 ft. lbs. (75 Nm)
Hex and socket head	9/16” (M 14)	85 ft. lbs. (120 Nm)
Hex and socket head	5/8” (M 16)	141 ft-lbs (200 Nm)

NOTE
Check for leakage of the complete system from time to time by brushing all fittings and couplings with soapy water or spraying with leak test spray. Repair any leaks.

7.2 Lubricants Chart

If not stated elsewhere, use the following lubricants:

Usage	Lubrication
O-rings, rubber and plastic parts; filter housing threads	Parker “O” Lube
Sealing rings	Parker “O” Lube
Bolts, nuts, studs, valve parts, copper gaskets and tube connections (threads, cap nut and compression rings)	Never-Seez NSWT, Pipe Dope or teflon tape
Paper gaskets	Apply silicon compound on both sides before assembly, i.e., DOW Corning 732
High temperature connections	Temperature resistant compound, i.e., DOW Corning 732
Ferrules of tube connections	Never-Seez NSWT

7.3 PSI to BAR Conversion Table

psi	bar	psi	bar	psi	bar	psi	bar	psi	bar
1	0.07	65	4.48	350	24.1	950	66	3500	241
10	0.69	70	4.83	400	27.6	1000	69	4000	276
15	1.03	75	5.17	450	31.0	1050	72	4500	310
20	1.38	80	5.52	500	34.5	1100	76	5000	345
25	1.72	85	5.86	550	37.9	1150	79	5500	379
30	2.07	90	6.21	600	41.4	1200	83	6000	414
35	2.41	95	6.55	650	44.9	1250	86	6500	448
40	2.76	100	6.90	700	48.3	1300	90	7000	483
45	3.10	150	10.3	750	51.7	1800	124	7500	517
50	3.45	200	13.8	800	55	2300	159	8000	552
55	3.79	250	17.2	850	59	2500	172	8500	586
60	4.14	300	20.7	900	62	3000	207	9000	621

7.4 ^{o}F to ^{o}C Conversion Table

^{o}F	^{o}C
- 40	- 40
- 30	- 34
- 20	- 29
- 10	- 23
- 5	- 21
0	- 18
+ 5	- 15
10	- 12
15	- 9
20	- 7
25	- 4

°F	°C
30	- 1
40	+ 4
50	10
60	16
70	21
80	27
90	32
100	38
150	66
200	93

7.5 Conversion Formulas

°F = 9/5°C + 32

BAR =PSI x 0.06895

PSI = BAR x 14.5

8.0 ANNEX

- Pneumatic diagram(s)
- Any special documentation supersedes and/or supplements the respective paragraphs/figures of this Instruction Manual.

Instruction Manual and Replacement List

BAUER COMPRESSORS

CFS

CFS-2S, CFS-2M, CFS-3S, CFS-3M
Containment Fill Stations

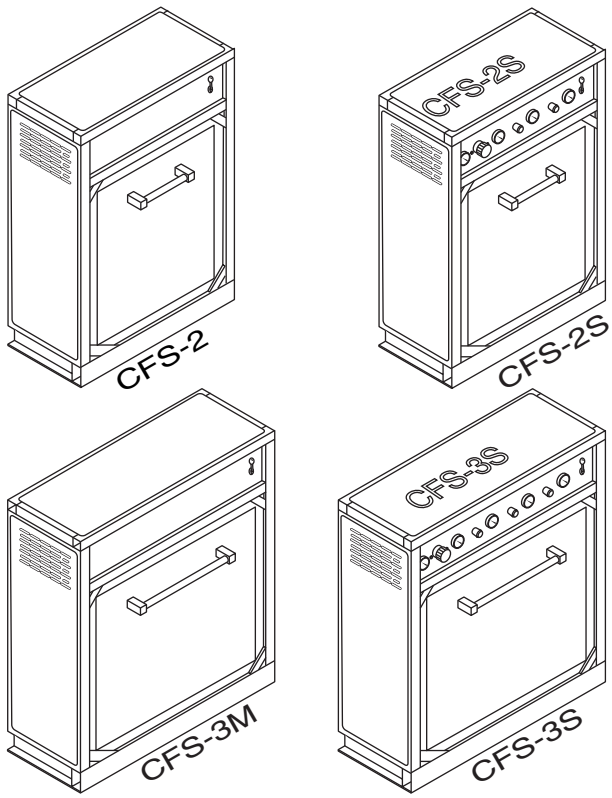

January 2002

MNL-0256

BAUER Compressors, Inc.
1328 Azalea Garden Road
Norfolk, Virginia 23502-1944

Phone: (757) 855-6006
Fax: (757) 855-6224
www.bauercomp.com

BAUER
COMPRESSORS

A REPLACEMENT PARTS LIST

- NHA in the Quantity column means the parts are illustrated for assembly purposes only and are not available for sale as individual components. These parts can be obtained by ordering the complete assembly.
- NS in the Item Number column indicates a part which is not shown, but is available.
- A dash (-) in the Item Number column indicates that there is more than one part number applicable to the item number and varies according to local requirements. e.g. two electric motors - one designated for 50Hz and another designated for 60 Hz.
- AR in the Quantity column means that the item is cut or manufactured to the size which the customer specifies.

When placing an order for spare parts, please provide the following information to ensure delivery of the correct parts.

Model Number	Date of Manufacture
Serial Number	Quantity required
Part Number	Part Description

Example: Junior-E3; manufactured 1998; Serial number 32165; requiring 2 reed valves, p/n N04860.

The model number, date of manufacture and serial number can be found of the compressor unit identification plate on the compressor unit's frame.

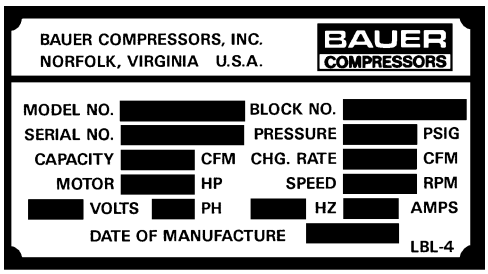

Changes are indicated by a Change Bar in the outer margin.

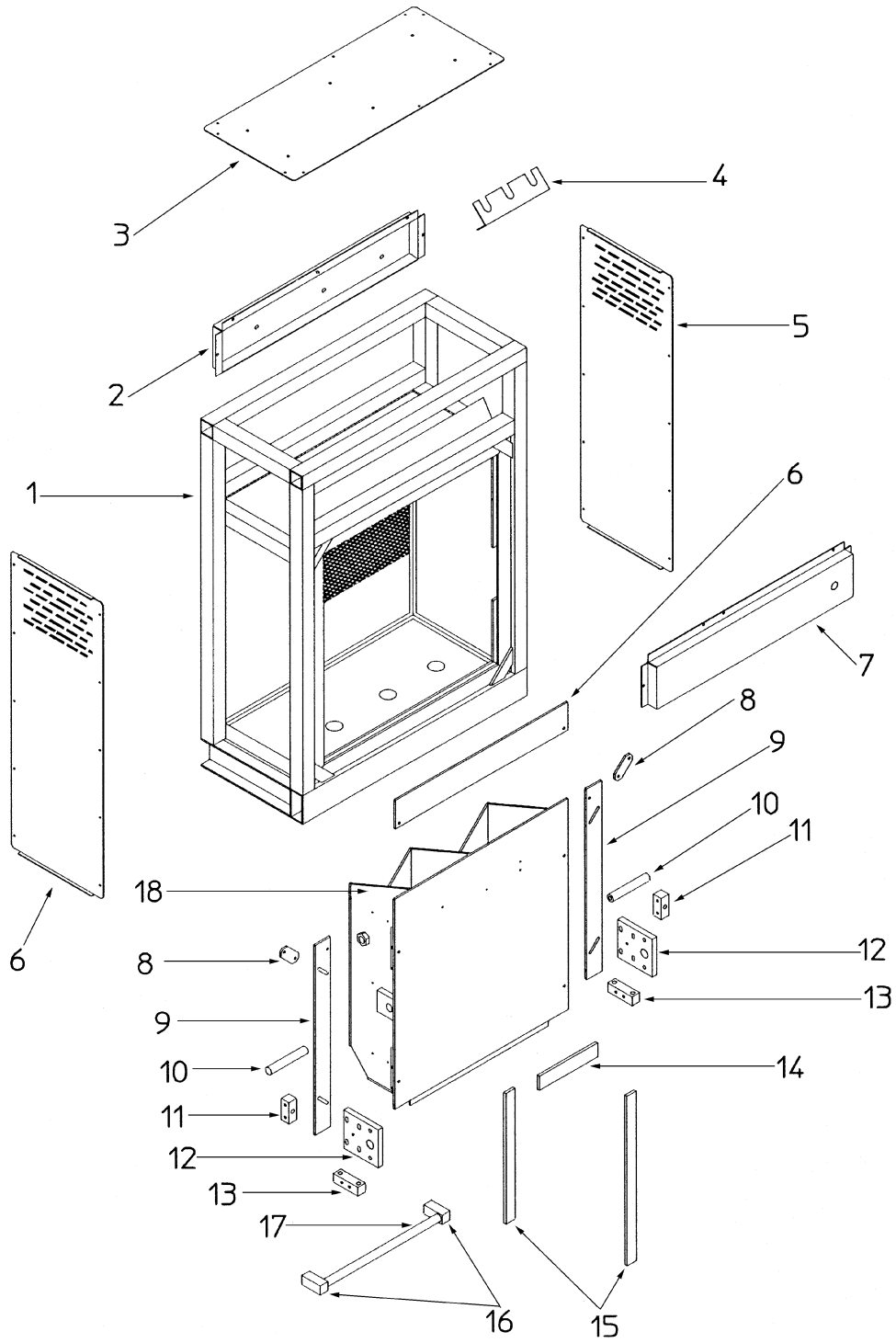

RPL Figure - 1 CFS-2M Frame Assembly

RPL Figure - 1 CFS-2M Frame Assembly

Item	Qty	Part No.	Description	Notes
1	1	FRM-0237	Fill Station Frame	
2	1	PNL-0951	Service Connection Panel	
3	1	PNL-0953	Roof Panel	
4	1	BRK-0360	Valve Mounting Bracket	
5	2	PNL-0931	Side Panel	
6	1	LCH-0037	Latch Bar	
7	1	PNL-0952	CFS-2M Instrument Panel	
8	2	BAR-0025	Lock Bar Support	
9	2	BAR-0024	Lock Bar	
10	2	PIN-0017	Fill Box Pivot Pin	
11	2	BAR-0012	Back Adjustment Bar	
12	2	PLT-0166	Adjustable Mounting Plate	
13	2	BAR-0016	Bottom Adjustment Bar	
14	2	STR-0025	Scuff Guard Strip	
15	8	STR-0026	Scuff Guard Strip	
16	2	MTS-0142	Handle Mount	
17	AR	TUB-R- 0098	Handle	1 1/4” OD x 15”
18	1	HOL-0060	Bottle Holder Assembly	

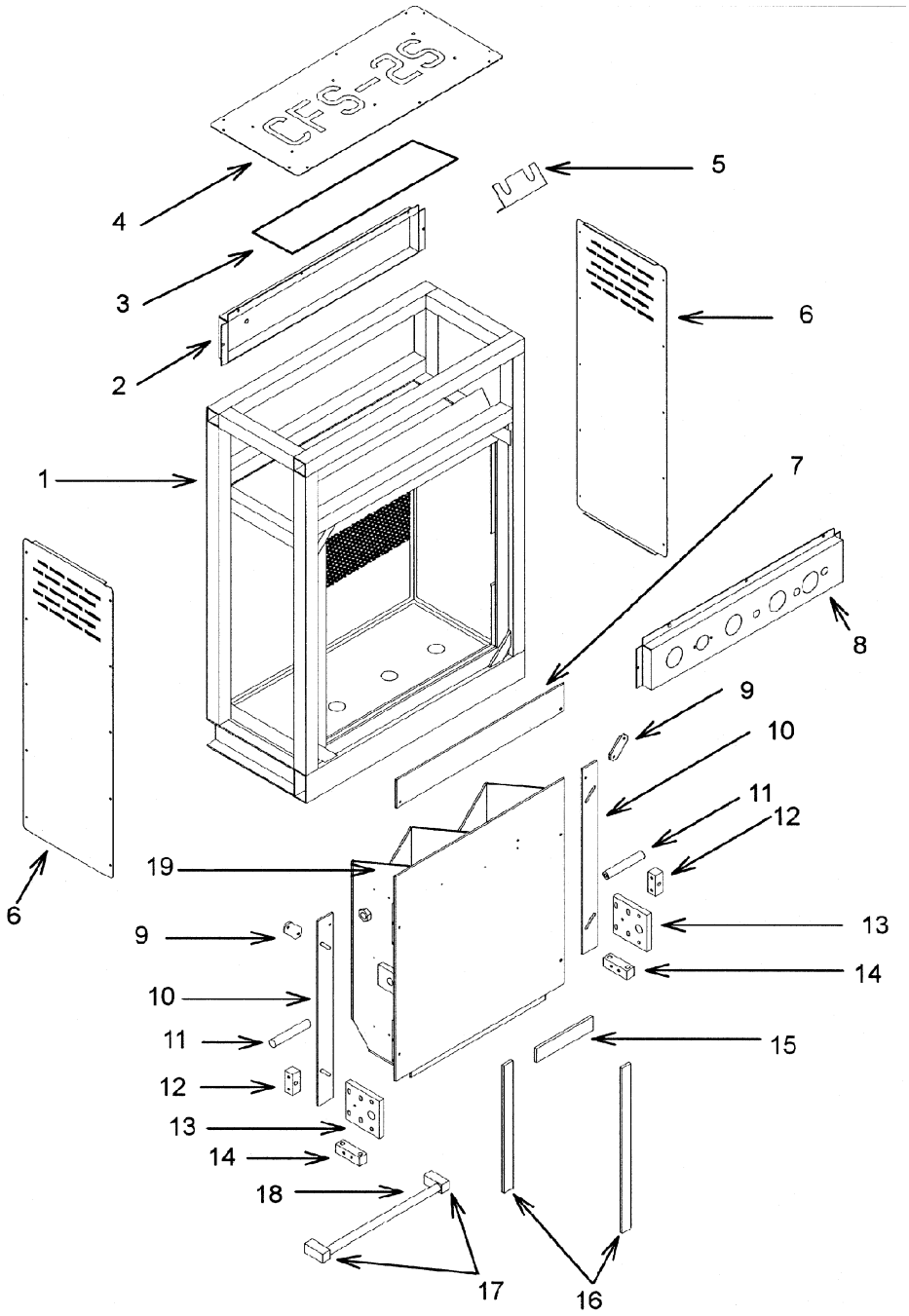

RPL Figure - 2 CFS-2S Frame Assembly

RPL Figure - 2 CFS-2S Frame Assembly

Item	Qty	Part No.	Description	Notes
1	1	FRM-0237	Fill Station Frame	CFS-2M and CFS-2S
2	1	PNL-0950	Service Connection Panel	
3	1	PNL-0930	Roof Backing Panel	
4	1	PNL-0947	Roof Panel	CFS-2S
5	1	BRK-0217	Valve Mounting Bracket	
6	2	PNL-0931	Side Panel	
7	1	LCH-0037	Latch Bar	
8	1	PNL-0949	Instrument Panel	
9	2	BAR-0025	Lock Bar Support	
10	2	BAR-0024	Lock Bar	
11	2	PIN-0017	Fill Box Pivot Pin	
12	2	BAR-0012	Back Adjustment Bar	
13	2	PLT-0166	Adjustable Mounting Plate	
14	2	BAR-0016	Bottom Adjustment Bar	
15	2	STR-0025	Scuff Guard Strip	
16	8	STR-0026	Scuff Guard Strip	
17	2	MTS-0142	Handle Mount	
18	AR	TUB-R-0098	Handle	1 1/4” OD X 15”
19	1	HOL-0060	Bottle Holder Assembly	

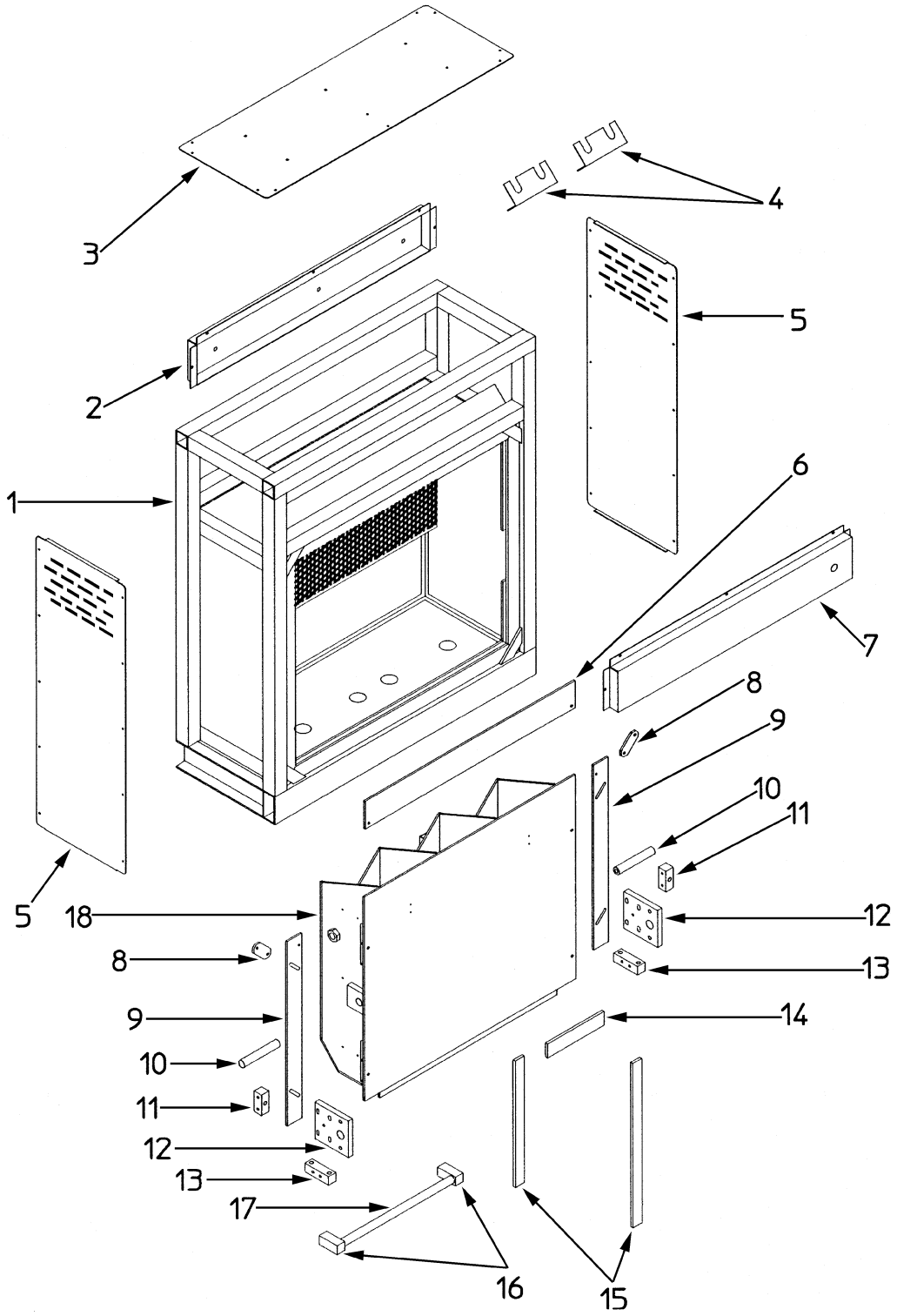

RPL Figure - 3 CFS-3M Frame Assembly

RPL Figure - 3 CFS-3M Frame Assembly

Item	Qty	Part No.	Description	Notes
1	1	FRM-0231	Fill Station Frame	CFS-3M and CFS-3S
2	1	PNL-0933	Service Connection Panel	CFS-3M
3	1	PNL-0980	Roof Panel	CFS-3M
4	2	BRK-0217	Valve Mounting Bracket	
5	2	PNL-0931	Side Panel	
6	1	LCH-0023	Latch Bar	
7	1	PNL-0935	Instrument Panel, CFS-3M	CFS-3M
8	2	BAR-0025	Lock Bar Support	
9	2	BAR-0024	Lock Bar	
10	2	PIN-0017	Fill Box Pivot Pin	
11	2	BAR-0012	Back Adjustment Bar	
12	2	PLT-0166	Adjustment Block	
13	2	BAR-0016	Bottom Adjustment Bar	
14	3	STR-0025	Scuff Guard Strip	
15	12	STR-0026	Scuff Guard Strip	
16	2	MTS-0142	Handle Mounts	
17	AR	TUB-R-0098	Handle	1 1/4” OD X 18”
18	1	HOL-0041	Bottle Holder Assembly	

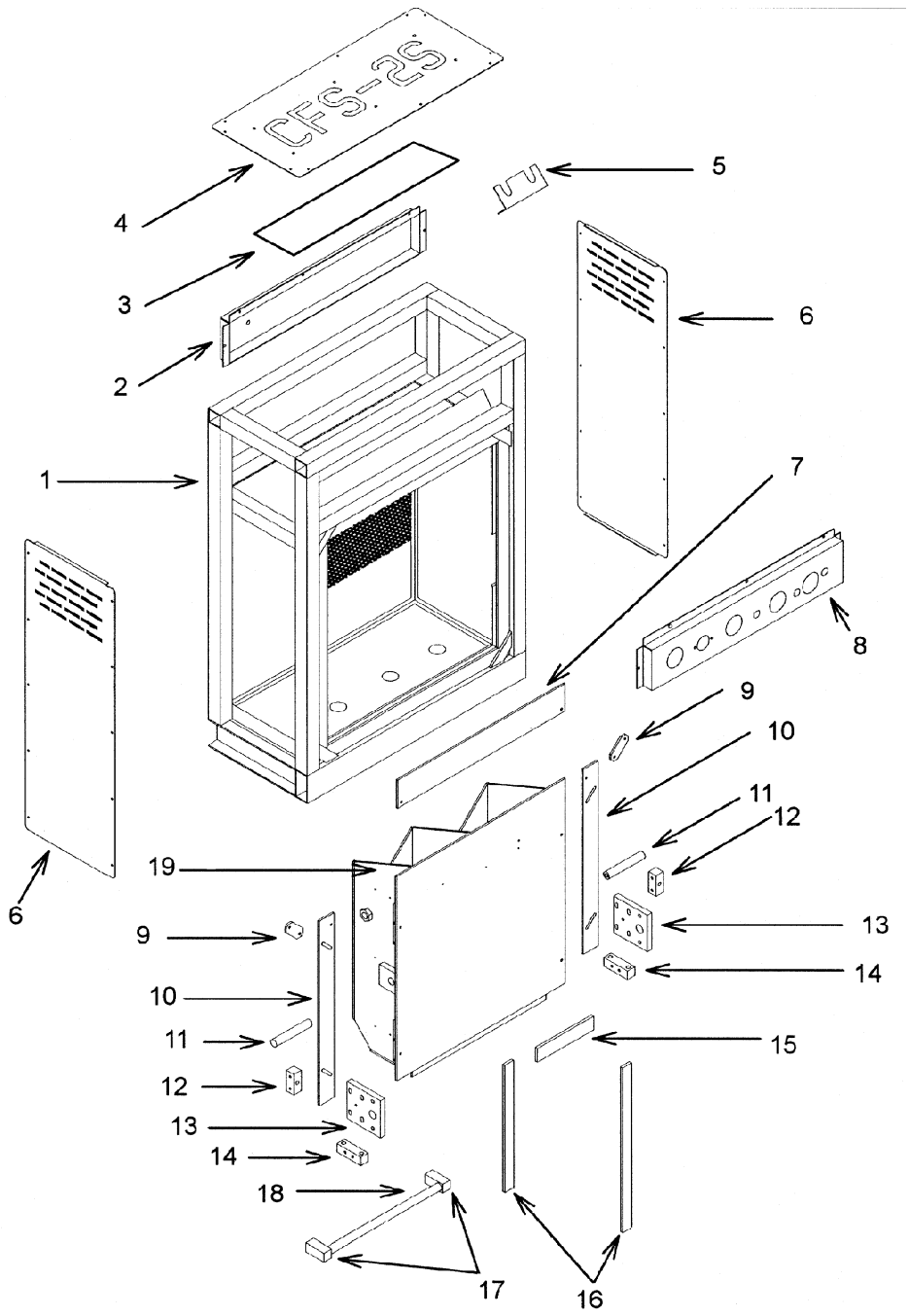

RPL Figure - 4 CFS-3S Frame Assembly

RPL Figure - 4 CFS-3S Frame Assembly

Item	Qty	Part No.	Description	Notes
1	1	FRM-0231	Frame Assembly	CFS-3M and CFS-3S
2	1	PNL-0934	Service Connection Panel	
3	1	PNL-0930	Roof Backing Panel	
4	1	PNL-0932	Roof Panel	CFS-3S
5	1	BRK-0217	Valve Mounting Bracket	
6	2	PNL-0931	Side Panel	
7	1	LCH-0023	Latch Bar	
8	1	PNL-0936	Instrument Panel	
9	2	BAR-0025	Lock Bar Support	
10	2	BAR-0024	Lock Bar	
11	2	PIN-0017	Fill Box Pivot Bar	
12	2	BAR-0012	Back Adjustment Pin	
13	2	PLT-0166	Adjustable Mounting Plate	
14	2	BAR-0016	Bottom Adjustment Bar	
15	3	STR-0025	Scuff Guard Strip	
16	12	STR-0026	Scuff Guard Strip	
17	2	MTS-0142	Handle Mount	
18	AR	TUB-R-0098	Handle	1 1/4” OD X 18”
19	1	HOL-0041	Bottle Holder Assembly	

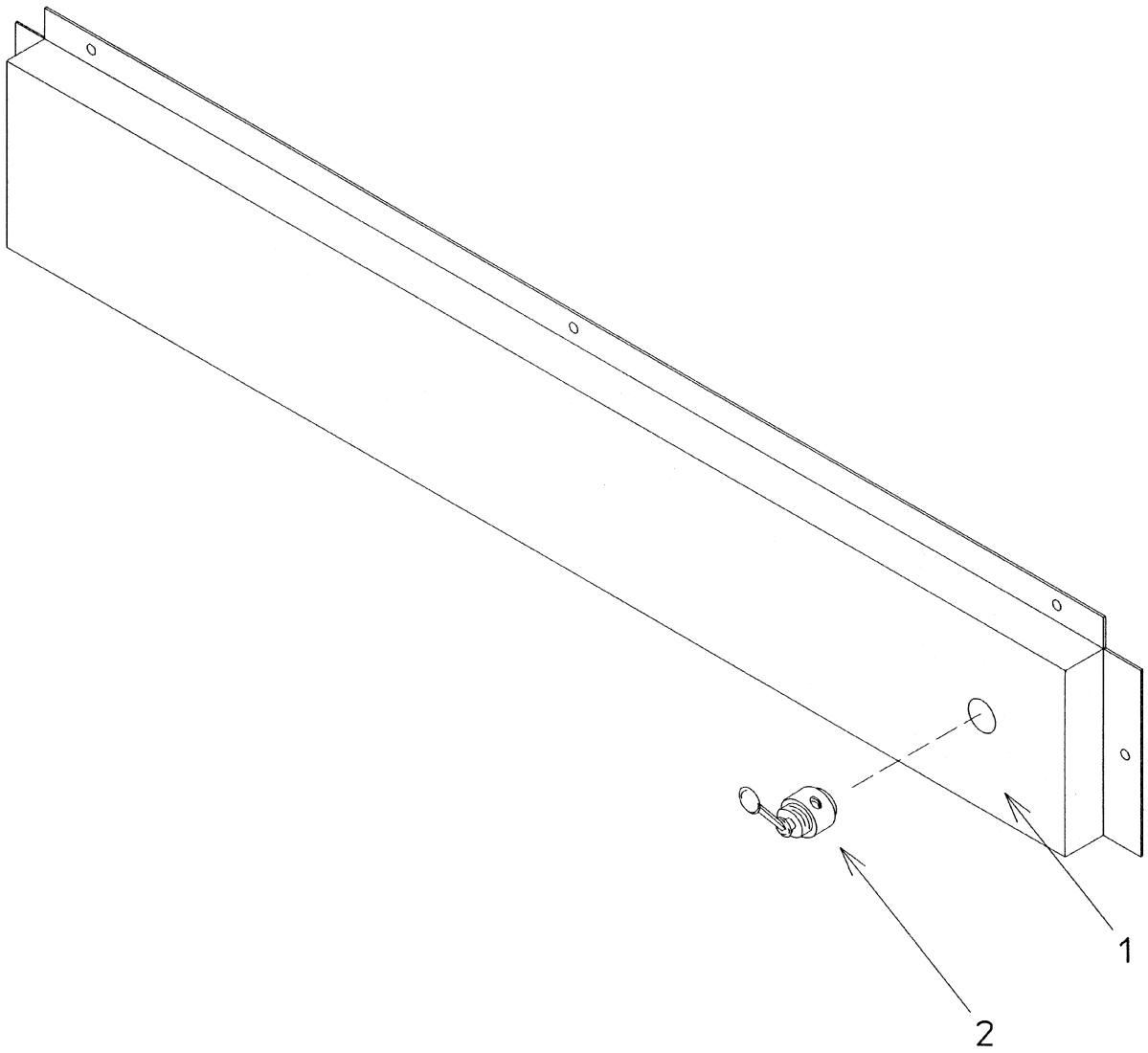

RPL Figure - 5 CFS-2M Control Panel

Item	Qty	Part No.	Description	Notes
1	1	PNL-0949	Panel, Instrument, CFS-2S	
2	1	ACT-0002	Actuator, Valve, with Toggle	

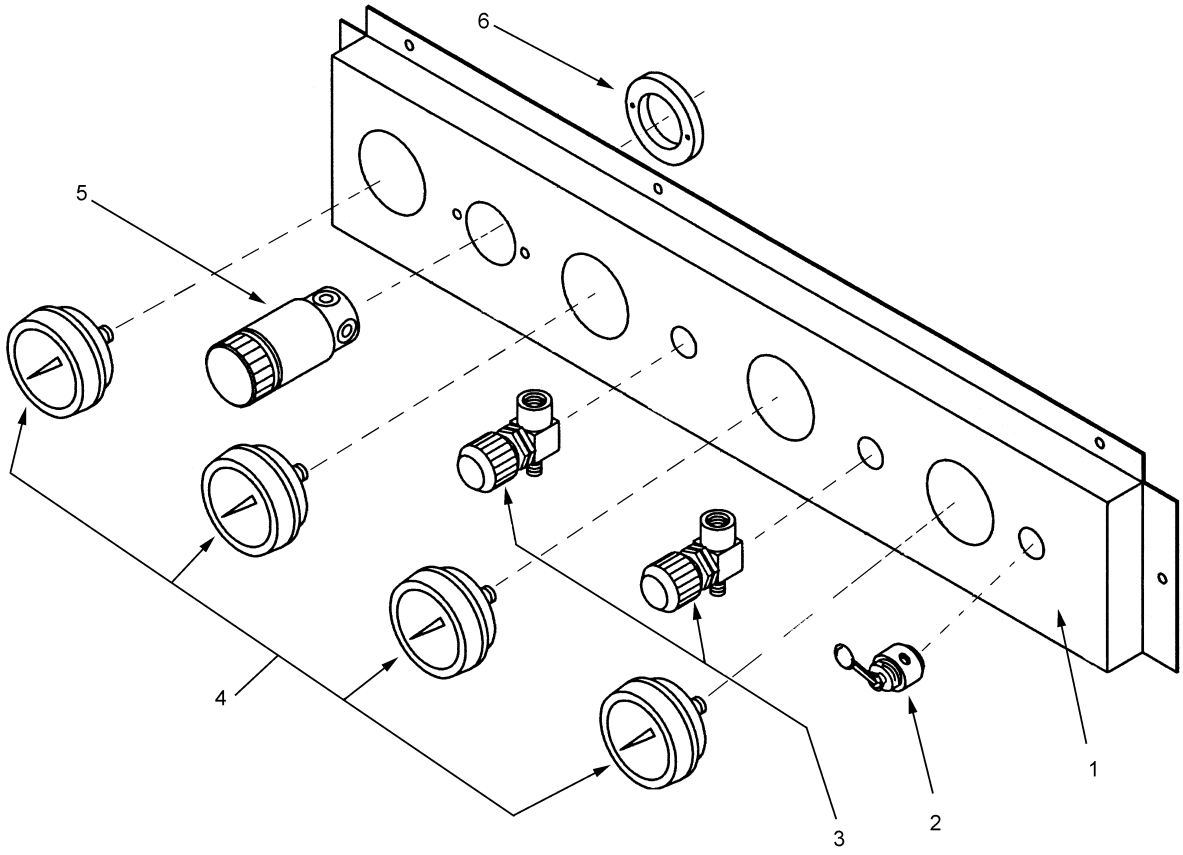

RPL Figure - 6 CFS-2S Fill Control Panel

Item	Qty	Part No.	Description	Notes
1	1	PNL-0949	Panel, Instrument, CFS-2S	
2	1	ACT-0002	Actuator, Valve with Toggle	
3	2	VAL-0076	Valve, Line	1/4” NPT, 6000 psi
4	4	GAG-0009W	Pressure Gauge	0-7500 psi, 2½”, ¼” NPT, UC
5	1	REG-0003	Regulator	¼” NPT, 6000 psi in 0-5000 psi out
6	1	BRK-0139	Bracket	Mount for REG-0003

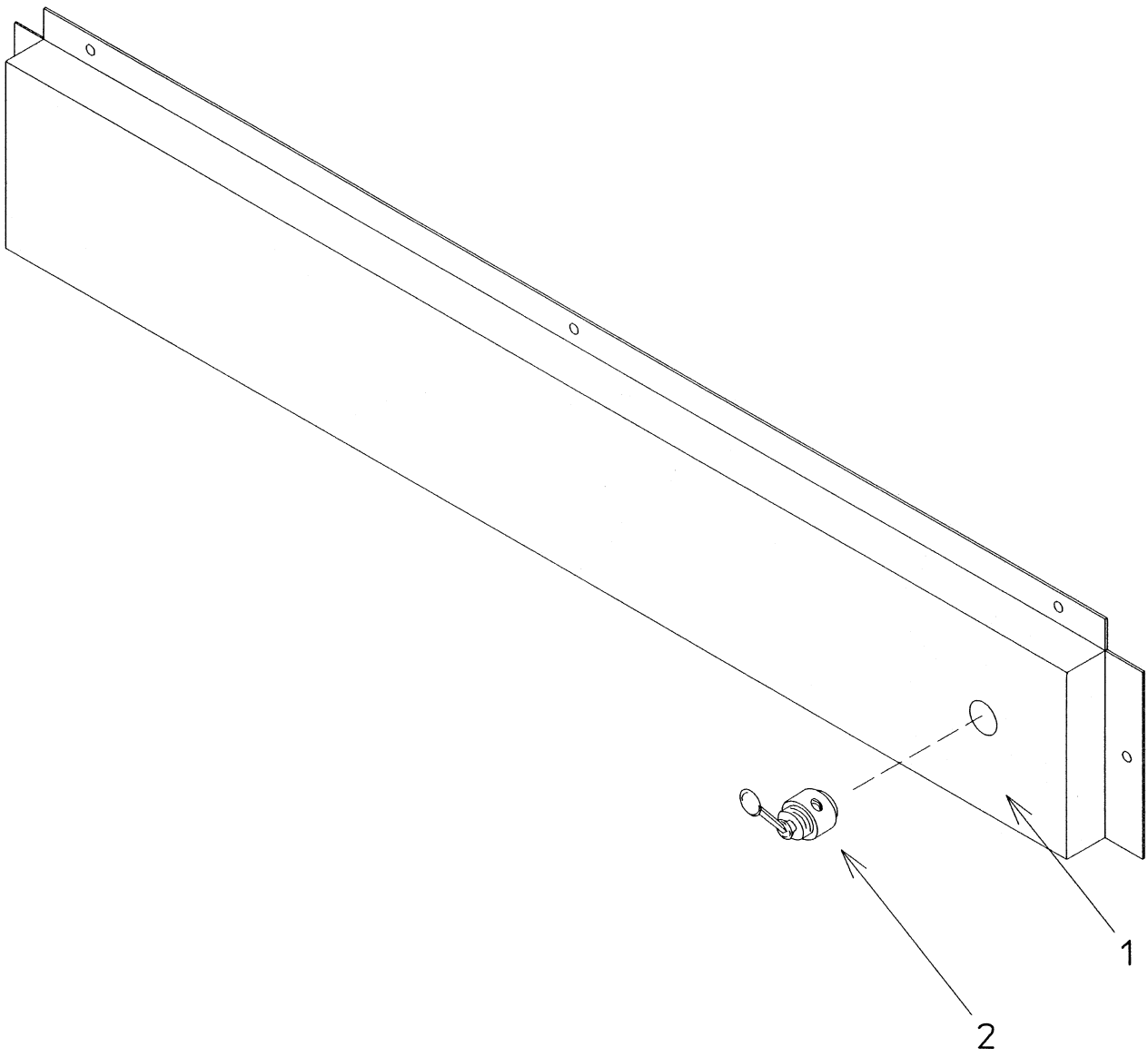

RPL Figure - 7 CFS-3M Control Panel

Item	Qty	Part No.	Description	Notes
1	1	PNL-0935	Panel, Instrument, CFS-3M	
2	1	ACT-0002	Actuator, Valve, with Toggle	

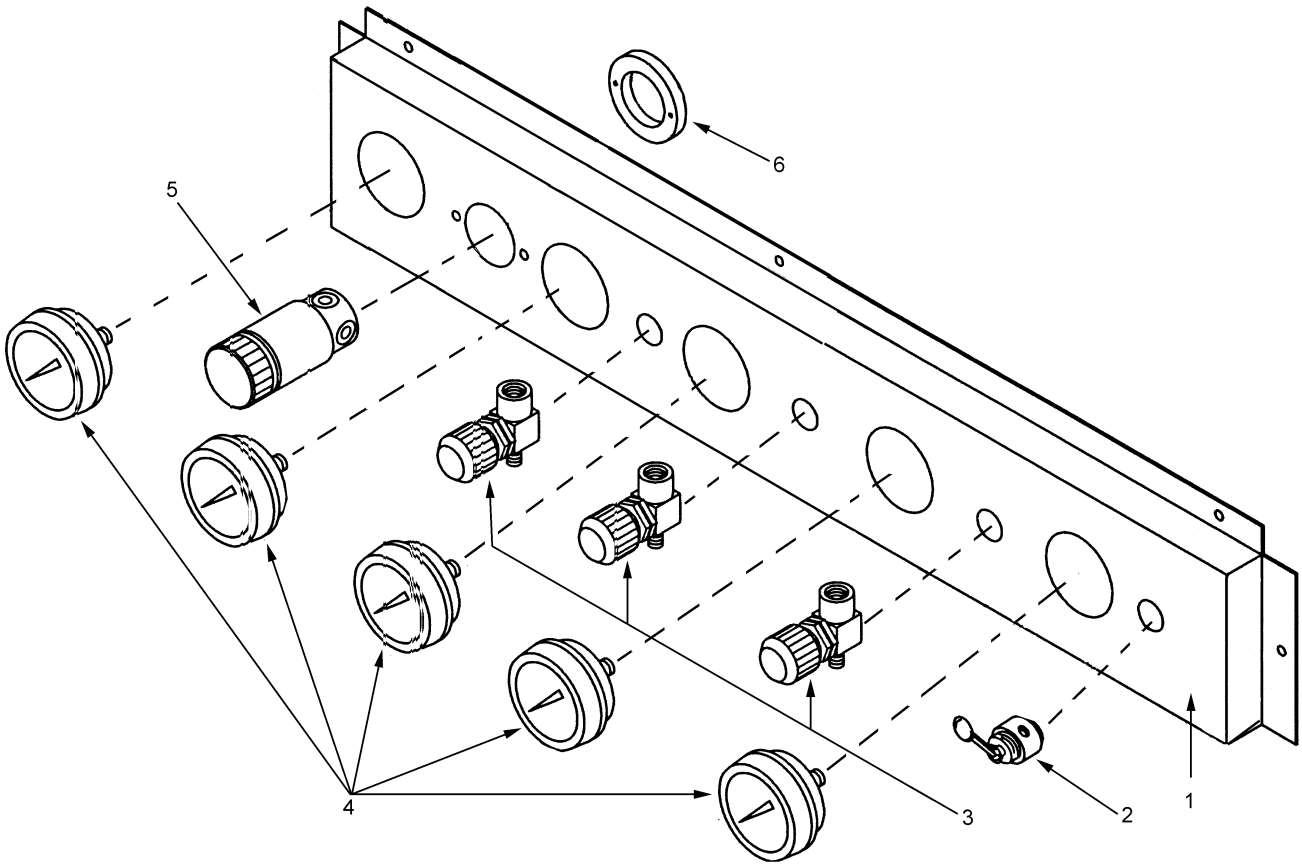

RPL Figure - 8 CFS-3S Fill Control Panel

Item	Qty	Part No.	Description	Notes
1	1	PNL-0936	Panel, Instrument, CFS-3S	
2	1	ACT-0002	Actuator, Valve, with Toggle	
3	3	VAL-0076	Valve, Line	¼" NPT
4	5	GAG-0009W	Gauge, Pressure	0-7500 psi, 2½' ¼' NPT, UC
5	1	REG-0003	Regulator	¼" NPT, 6000 psi in, 0-5000 psi out
6	1	BRK-0139	Bracket	Mount for REG-0003

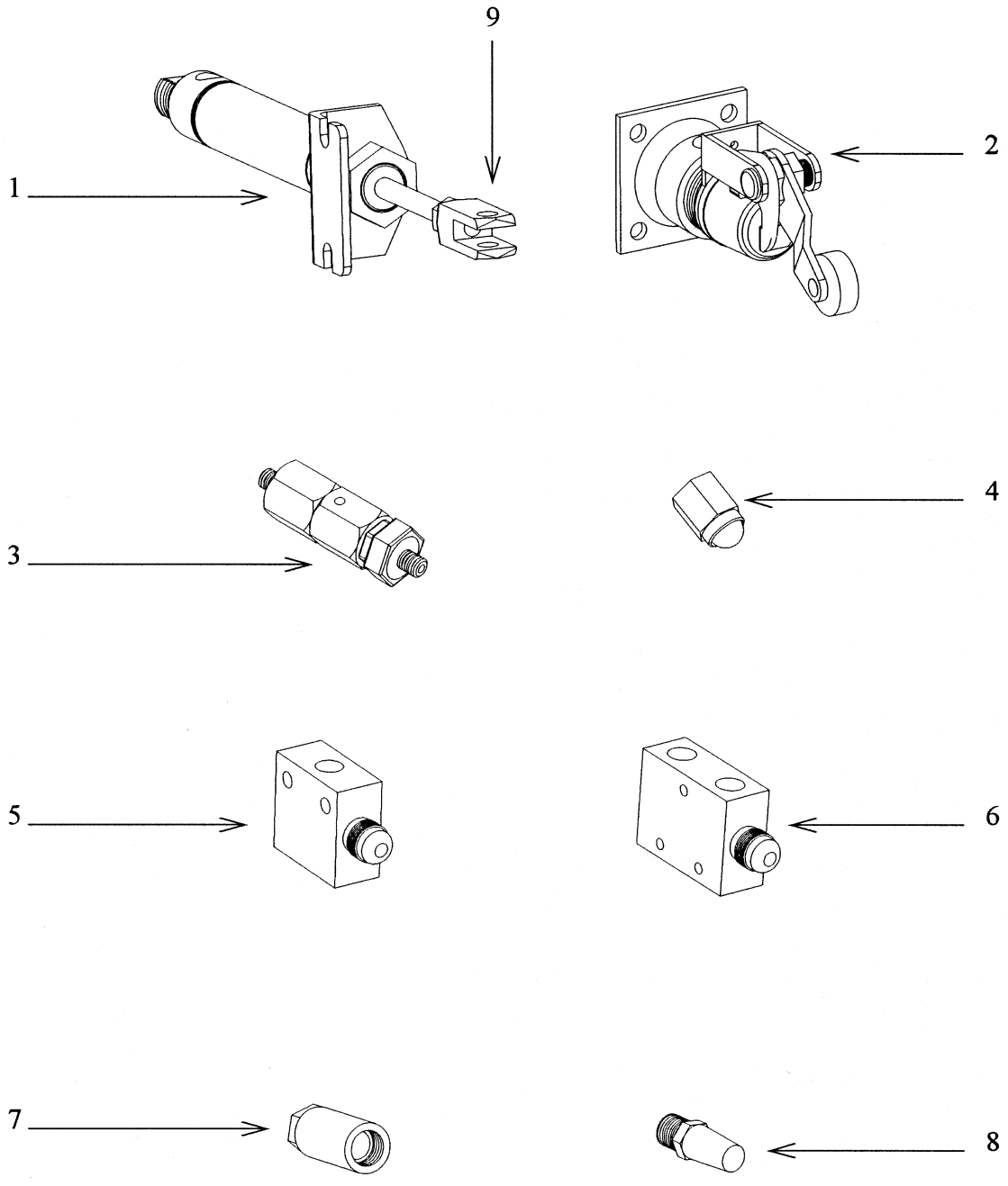

RPL Figure - 9 Pneumatic Controls and Actuators

RPL Figure - 9 Pneumatic Controls and Actuators

Item	Qty	Part No.	Description	Notes
1	2	CYL-0033	Pneumatic Cylinder	
2	1	VAL-0231	Door Position Valve	
3	1	VAL-0191	Fill Shutoff Actuator	CFS-2S and CFS-3S
-	2	VAL-0191	Fill Shutoff Actuator	CFS-2M
-	3	VAL-0191	Fill Shutoff Actuator	CFS-3M
4	2	ACT-0005	Door Latch Valve Actuator	Assembled with VAL-0239
5	2	VAL-0239	Door Latch Valve	
6	1	VAL-0230	Pneumatic Cylinder Actuating Valve	
7	1	ACT-0003	Air Pilot Actuator Valve	Assembled with VAL-0230
8	4	MUF-0010	Pneumatic Exhaust Muffler	
9	2	CLV-0005	Piston Rod Clevis	Assembled with CLY-0033

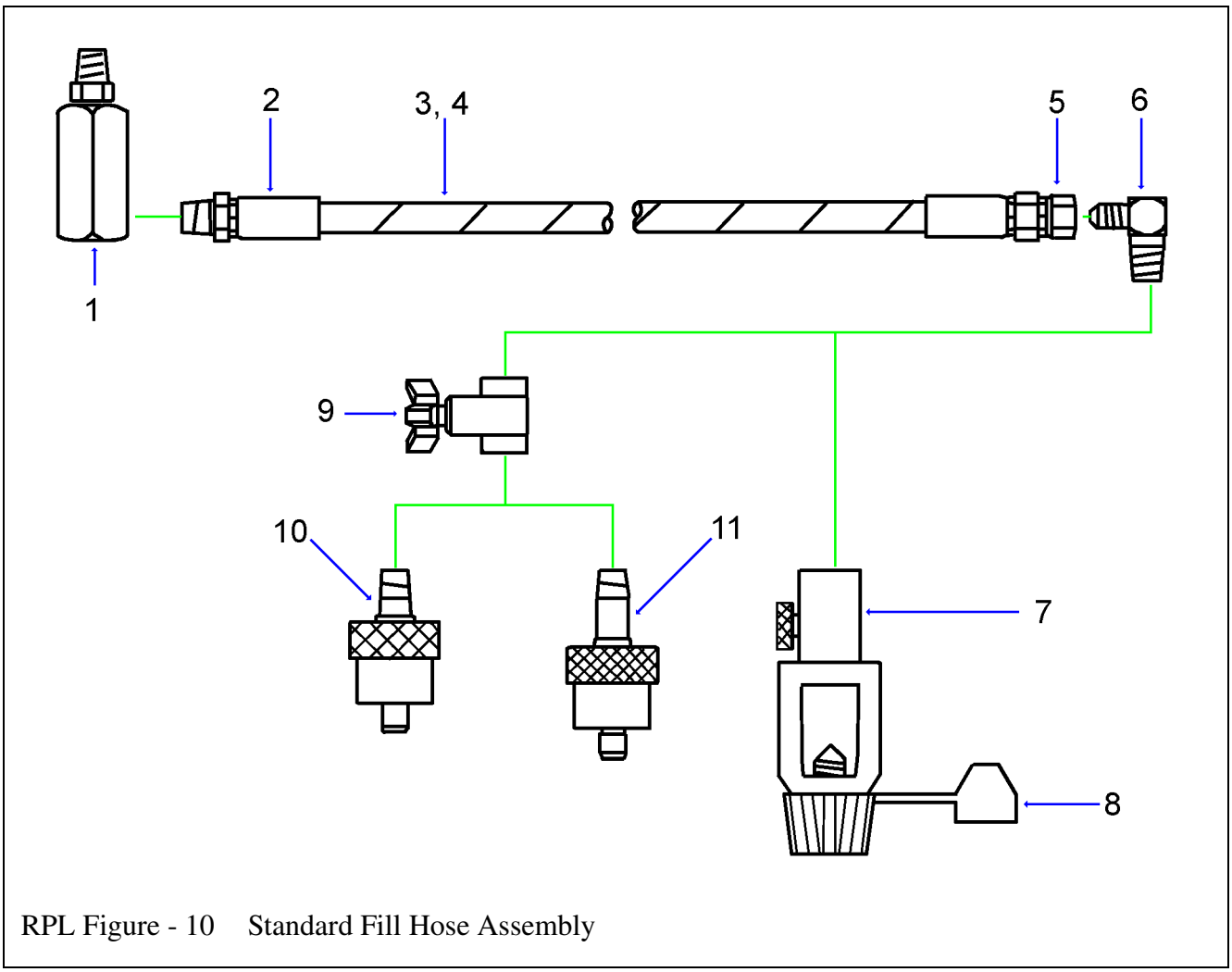

RPL Figure - 10 Standard Fill Hose Assembly

Item	Qty	Part No.	Description	Notes
1	1	ELL-0255	Swivel Hose Coupling	
2	1	CPL-0070	Male Hose Coupling	3/16” ID Hose X 1/4” NPTm
3	AR	HOS-R-0038	High Pressure Hose	3/16” ID x 18”
4	AR	GRD-0225	Spiral Hose Wrap	1/2” OD, Blue
5	1	CPL-0067	Swivel Hose Coupling	3/16” ID x 716”-20 Swivel
6	1	ELL-0031	Male Elbow	1/4” NPTm X 1/4” 30°
7	1	YOK-0001	SCUBA Fill Yoke w/Bleeder	
8	1	CAP-0023	SCUBA Yoke Dust Cap	
9	1	065126	Bleed Valve	1/4”NPTf
10	1	ADP-0112	Fill Adapter	For 4500/2215 psi Cylinders
11	1	ADP-0113	Fill Adapter	For 4500 psi SCUBA

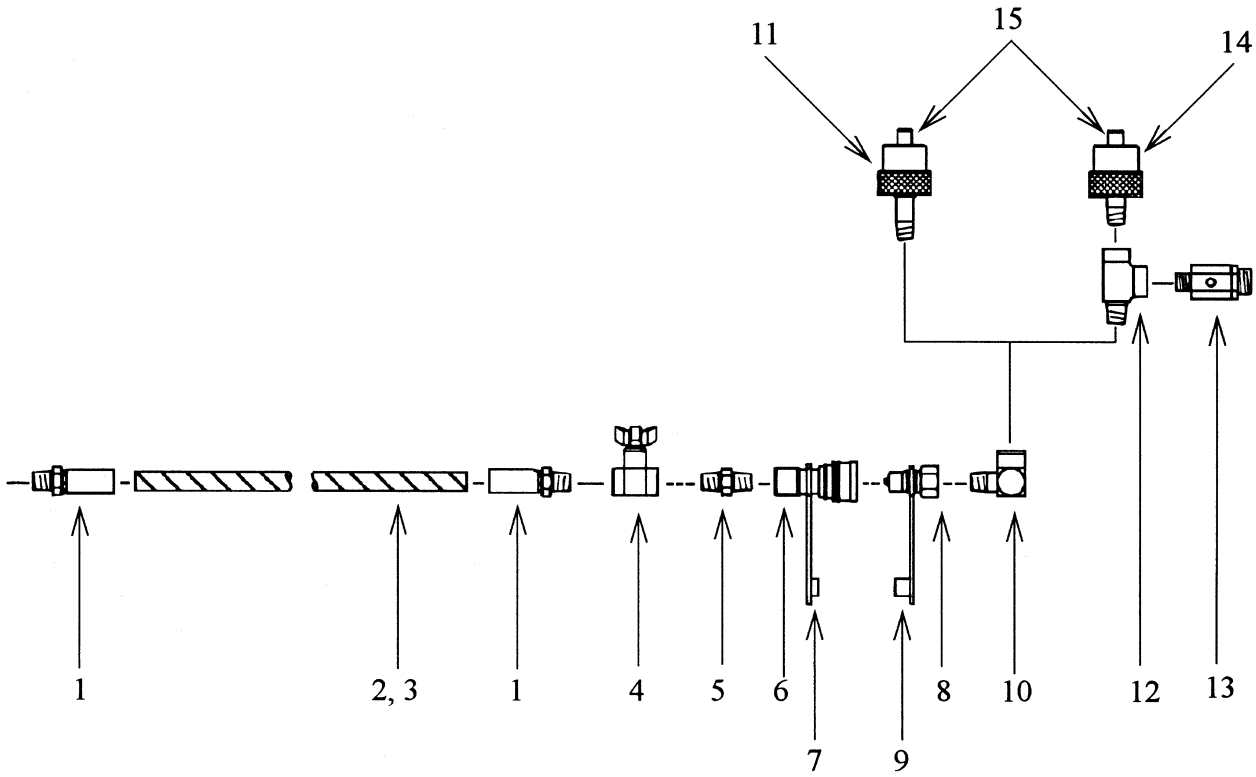

RPL Figure - 11 Dual Fill Hose Assembly

Item	Qty	Part No.	Description	Notes
1	2	CPL-0070	Male Hose Coupling	316” ID Hose x 1/4” NPTm
2	AR	HOS-R-0038	High Pressure Hose	3/16” ID
3	AR	GRD-0225	Spiral Hose Wrap	1./2” OD, Blue
4	1	065126	Bleed Valve	1/4” NPTf
5	1	CON-0017	Hex Nipple Connector	1/4 NPTm
6	1	CON-0162	Quick Disconnect Socket	5000 psi
7	1	CAP-0026	Socket Dust Cap	
8	1	CON-0163	Quick Disconnect Plug	5000 psi
9	1	CAP-0027	Plug Dust Cap	
10	1	ELL-0018	Street Elbow	1/4” NPT
11	1	ADP-0113	Fill Adapter	For 4500 psi SCUBA cylinder
12	1	TEE-0012	Male Run Tee	1/4” NPT
13	1	VAL-0169	Safety Valve	300 to 6000 psi
14	1	ADP-0112	Fill Adapter	For 4500/2215 psi cylinder
15	2	N04483	O-Ring	

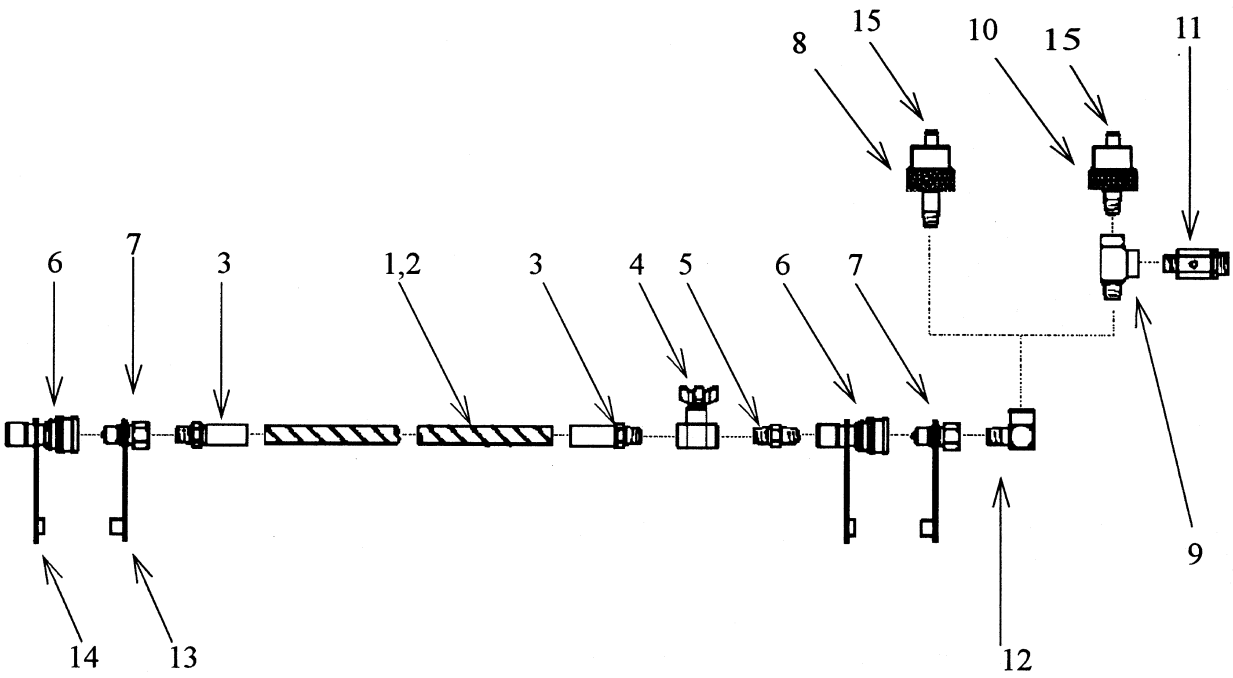

RPL Figure - 12 Remote Fill Hose Assembly (Optional)

Item	Qty	Part No.	Description	Notes
1	AR		HOS-R-0038	High Pressure Hose3/16” ID
2	AR		GRD-0225	Spiral Hose Wrap1/2” OD, Blue
3	2	CPL-0070	Male Hose Coupling	3/16” ID hose x 1/4” NPT
4	1	065126	Bleed Valve	1/4” NPTf
5	1	CON-0017	Hex Nipple Connector	1/4” NPTm
6	2	CON-0162	Quick Disconnect Socket	5000 psi
7	2	CON-0163	Quick Disconnect Plug	5000 psi
8	1	ADP-0113	Fill Adapter	For 4500 psi SCUBA Cylinder
9	1	TEE-0012	Male Run Tee	1/4” NPT
10	1	ADP-0112	Fill Adapter	For 4500/2215 psi Cylinder
11	1	VAL-0169	Safety Valve	300 to 6000 psi
12	1	ELL-0018	Street Elbow	1/4” NPT
13	2	CAP-0027	Plug Dust Cap	
14	2	CAP-0026	Socket Dust Cap	
15	2	N04483	O-Ring	

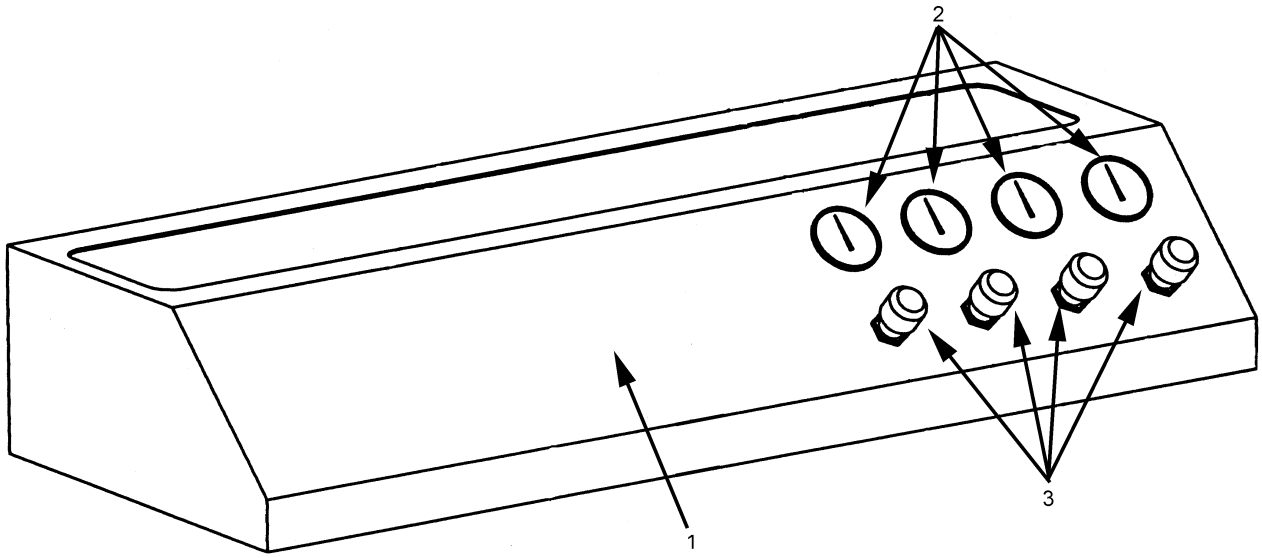

RPL Figure - 13 Cascade Panel (Optional)

Item	Qty	Part No.	Description	Notes
1	1	PNL-0991	Cascade Panel	CFS-2S
-	1	PNL-1010	Cascade Panel	CFS-3S
2	4	GAG-0009W	Pressure Gauge	0-7500 psi, 2 1/2". 1/4" NPT, UC
3	4	VAL-0076	Line Valve	6000 psi, 1/4" NPT

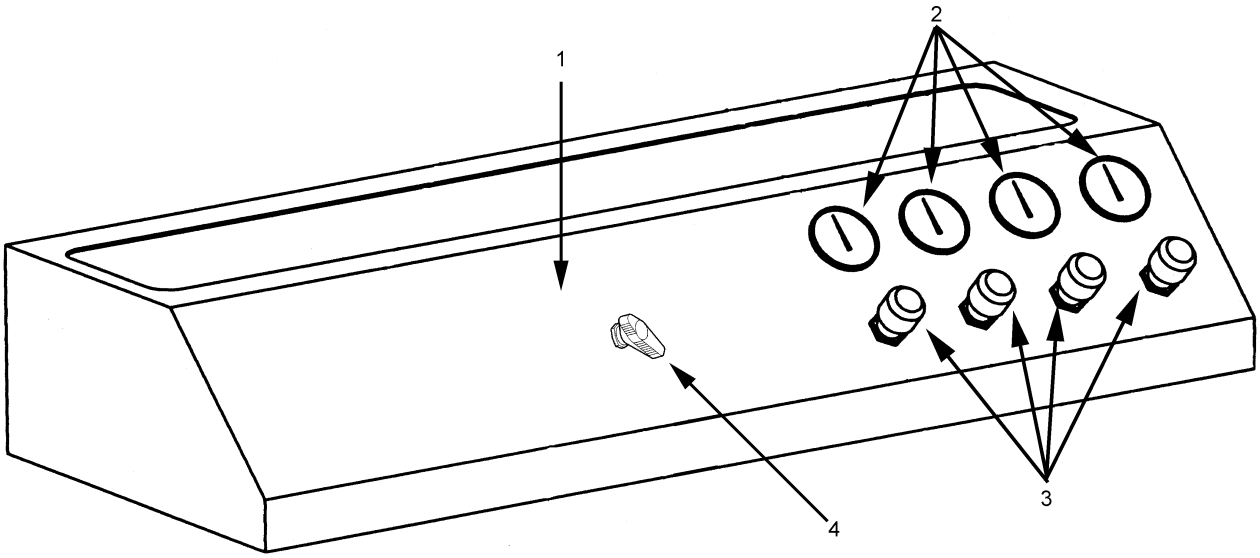

RPL Figure - 14 Cascade Panel with 3 Way Valve (Optional)

Item	Qty	Part No.	Description	Notes
1	1	PNL-0991	Cascade Panel with 3 Way Valve	CFS-2S
-	1	PNL-1010	Cascade Panel with 3 Way Valve	CFS-3S
2	4	GAG-0009W	Pressure Gauge	0-7500 psi, 2 1/2". 1/4" NPT, UC
3	4	VAL-0076	Line Valve	6000 psi, 1/4" NPT
4	1	VAL-0067	Valve, 3-way Ball	1/4"

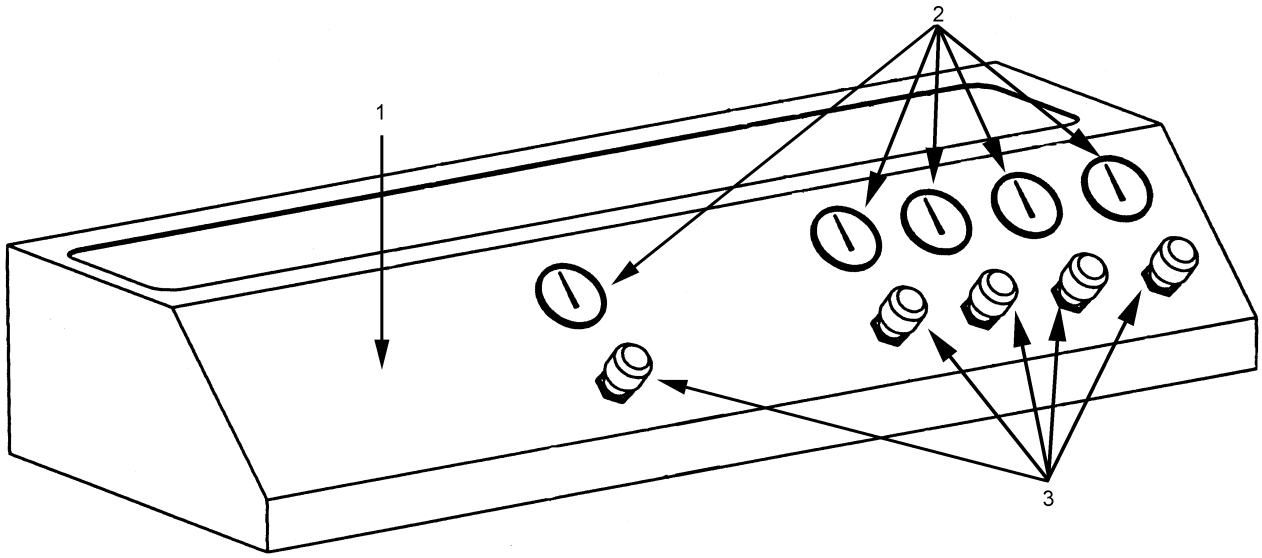

RPL Figure - 15 Cascade Panel with Remote Fill (Optional)

Item	Qty	Part No.	Description	Notes
1	1	PNL-1042	Cascade Panel with 3 Way Valve	CFS-2S
-	1	PNL-1043	Cascade Panel with 3 Way Valve	CFS-3S
2	5	GAG-0009W	Pressure Gauge	0-7500 psi, 2 1/2". 1/4" NPT, UC
3	5	VAL-0076	Line Valve	6000 psi, 1/4" NPT

BAUER
COMPRESSORS