Thermo Valves Corporation

Scuba Diving Valves

The Leader in High Pressure Technology

Date: 05/31/04

Thermo PRO

Thermo Scuba Products are Sold Through Authorized Distributors Only

Thermo PRO Modular with H Connector

Thermo DIN

Table of Contents

Thermo Valves Corporation

THE LEADER IN HIGH PRESSURE TECHNOLOGY

Who We Are

Thermo Valves Corporation was founded in 1972 as a manufacturer of compressed gas cylinder valves and adaptors to a wide variety of international standards. Thermo was acquired in 1988 by Hamai Industries Limited who has been manufacturing cylinder valves for over 75 years! Thermo now specializes in specialty gas valves, valves for the semiconductor industry and scuba diving valves. Thermo's mission is to supply state of the art equipment with a focus on safety and innovation

SCUBA Diving Valves

With over 75 years of manufacturing experience, Thermo Valves full line includes the Thermo K, Thermo PRO, Thermo DIN and Thermo Modular Series of scuba diving valves. From the triple coated polished chrome finish to the Teflon coated high pressure seat assembly, all Thermo scuba valves are precision engineered for optimum performance and extreme dependability. Thermo scuba valves can be found in diving locations world wide and have a reputation for safe and reliable operation to insure that your regulator will perform at it's peak.

Specialty Gas and Semiconductor Valves

While this catalogue does not go into detail on our Specialty Gas and Semiconductor Valves lines, it's comforting for the user to know that we manufacture much more than just scuba valves. The world of semiconductor chip manufacturing and other specialty gas operations requires valves manufactured to ultra-high precise tolerances and ultra-smooth finishes. Designed to operate under environments of high vacuum and high pressure, these valves must also be compatible with the often severe effects of unique gases used in semiconductor chip manufacturing.

PRODUCTS AND FEATURES

The Thermo Stand Alone series is designed with an angled handwheel and a shielded side safety assembly to make the lifting of your cylinder easier. From the reliable Thermo K valve and Thermo PRO valve to the Thermo DIN series, there is a stand alone valve designed for your diving pleasure.

The Thermo Modular series of valves can be combined into a variety of configurations and are often used by the technical diver. With a modular valve, the diver can dive with a single cylinder or the valves can be combined into a manifold configuration to dive with two cylinders for extended down time. Another alternative is to add the 9020 or 9040 type H connector valve to the modular series so that the diver has a single cylinder with two valve outlets. If maximum flexibility is what you desire, the Thermo Modular series can be configured for your diving needs.

<u>All</u> Thermo scuba valves are triple bright chrome plated for maximum protection and long lasting beauty in salt water environments. The new Easy Grip handwheel is made from soft rubber formed around a stainless steel insert. The stainless steel insert insures positive long lasting life. The large soft rubber ribs make it easy to open or close the valve even while wearing dive gloves.

<u>All</u> Thermo scuba valves come with a one piece safety plug assembly which eliminates the possibility of mismatched components and can be used on all prior versions of Thermo scuba valves. This greatly reduces the likelihood of accidental "double disking" of the safety assembly and protects the integrity of your diving cylinder. The safety device is shielded by the valve body to avoid damage during transportation or while diving.

<u>All</u> Thermo scuba valves come with a high pressure plug & seat assembly manufactured from a high tensile brass alloy and the threaded area is coated with Teflon. Both the material and the Teflon coating insure a lube less, smooth operation and prolongs the life of your valve! During the manufacturing process every valve is pressure tested under high pressure to test for leaks and ease of operation at operating pressures.

SCUBA VALVE OUTLETS

Thermo scuba valves come with three different outlets to mate with any of the most common scuba regulators. The choice of which outlet to use is based on cylinder pressure and desired flexibility. The Thermo K and Thermo PRO scuba outlets are designed for cylinders with service pressures up to 230 Bar and the Thermo DIN scuba outlet is designed for cylinders with service pressures above 230 Bar.

THERMO K TYPE OUTLET

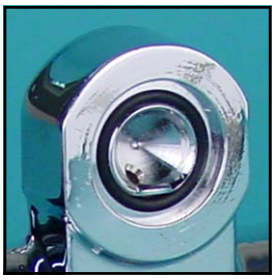

The outlet on the Thermo K valve is designed with twin dimples in the bottom section of the O-ring keeper. This helps to avoid O-ring blowout when disconnecting your first stage regulator. The K type outlet is used on valves with service pressures up to 230 Bar.

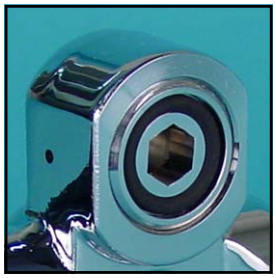

THERMO PRO TYPE OUTLET

The outlet on the Thermo PRO valve comes with a removable insert which allows the valve to be used either as a K type yoke outlet or as a 230 Bar threaded DIN outlet. Whether your regulator has a K type yoke connection, 230 Bar DIN connection or 300 Bar DIN connection, it will attach to the Thermo PRO valve. This type of outlet gives you the maximum amount of versatility on cylinders with pressures up to 230 Bar.

THERMO DIN TYPE OUTLET

The outlet on the Thermo DIN series of valves is designed for higher pressure cylinders. This outlet can be found on valves for use at pressures up to 3500 or 4350 psi. This outlet is primarily used on cylinders with service pressures above 230 Bar. The additional threads in the Thermo DIN outlet will not allow either K type regulators or 230 Bar type regulators to attach to it in order to protect down stream equipment from higher pressures.

BREATHING AIR OR EAN?

Thermo scuba valves and scuba valve parts are for either breathing air service or for EAN ready service. The service is shown with the description of each valve or part later in this catalogue.

A valve intended for breathing air service is designed for Grade E breathing air (21% oxygen and 79% nitrogen by volume) and may not be used for any other purpose.

A valve intended for EAN ready service may be used for either oxygen enriched breathing air with a maximum oxygen content of 40% OR Grade E breathing air. IF AT ANY TIME AN EAN READY VALVE IS USED WITH GRADE E BREATHING AIR OR ANY GAS OTHER THAN OXYGEN ENRICHED BREATHING AIR, DO NOT USE THE VALVE FOR OXYGEN ENRICHED BREATHING AIR THEREAFTER!

**See additional warnings and instructions at end of catalogue!*

5251 THERMO K

Type: Stand Alone Thermo K Scuba Valve with Angled Handwheel and Shielded Side Safety Assembly
Outlet: K Type Outlet
Inlet: 3/4-14 NPSM

PART NUMBER	SERVICE PRESSURE	GAS SERVICE
5251-4000	2400 psi	Breathing Air
5251-5000	3000 psi	Breathing Air
5251-5500	3300 psi	Breathing Air
5251-32.4MPa	21.6 MPa	Breathing Air
5251-36MPa	22.5 MPa	Breathing Air
5251-34.5MPa	20.7 MPa	Breathing Air

5651 THERMO PRO

Type: Stand Alone Thermo PRO Scuba Valve with Angled Handwheel and Shielded Side Safety Assembly
Outlet: PRO Type Outlet
Inlet: 3/4-14 NPSM

PART NUMBER	SERVICE PRESSURE	GAS SERVICE
5651-4000	2400 psi	EAN Ready
5651-5000	3000 psi	EAN Ready
5651-5500	3300 psi	EAN Ready
5651-3442	3442 psi	EAN Ready
5651-32.4MPa	21.6 MPa	EAN Ready
5651-36MPa	22.5 MPa	EAN Ready
5651-34.5MPa	20.7 MPa	EAN Ready

5262 THERMO DIN

Type: Stand Alone Thermo DIN Scuba Valve with Angled Handwheel and Shielded Side Safety Assembly
Outlet: 300 Bar DIN Type Outlet
Inlet: 3/4-14 NPSM

PART NUMBER	SERVICE PRESSURE	GAS SERVICE
5262-4000	2400 psi	EAN Ready
5262-5000	3000 psi	EAN Ready
5262-5250	3180 psi	EAN Ready
5262-3442	3442 psi	EAN Ready
5262-5500	3300 psi	EAN Ready
5262-32.4MPa	21.6 MPa	EAN Ready
5262-36MPa	22.5 MPa	EAN Ready
5262-34.5MPa	20.7 MPa	EAN Ready

5282 THERMO DIN

Type: Stand Alone Thermo DIN Scuba Valve with Angled Handwheel and Shielded Side Safety Assembly
Outlet: 300 Bar DIN Type Outlet
Inlet: 7/8-14 UNF

PART NUMBER	SERVICE PRESSURE	GAS SERVICE
5282-5250	3500 psi	EAN Ready
5282-7250	4350 psi	EAN Ready*

*Note: EAN must be pre-blended when used with 5282-7250

8043 THERMO MODULAR

8043RH

8043LH

Type: Modular Thermo PRO Scuba Valve with Rear Shielded Safety Assembly
Outlet: PRO Type Outlet
Inlet: 3/4-14 NPSM

PART NUMBER	SERVICE PRESSURE	GAS SERVICE	HANDWHEEL ORIENTATION
8043RH-4000	2400 psi	EAN Ready	Right Hand
8043LH-4000	2400 psi	EAN Ready	Left Hand
8043RH-5000	3000 psi	EAN Ready	Right Hand
8043LH-5000	3000 psi	EAN Ready	Left Hand

8063 THERMO MODULAR

8063RH

8063LH

Type: Modular Thermo DIN Scuba Valve with Rear Shielded Safety Assembly
Outlet: 300 Bar DIN Type Outlet
Inlet: 3/4-14 NPSM

PART NUMBER	SERVICE PRESSURE	GAS SERVICE	HANDWHEEL ORIENTATION
8063RH-4000	2400 psi	EAN Ready	Right Hand
8063LH-4000	2400 psi	EAN Ready	Left Hand
8063RH-5000	3000 psi	EAN Ready	Right Hand
8063LH-5000	3000 psi	EAN Ready	Left Hand
8063RH-5250	3180 psi	EAN Ready	Right Hand
8063LH-5250	3180 psi	EAN Ready	Left Hand

8082 THERMO MODULAR

8082RH

8082LH

Type: Modular Thermo DIN Scuba Valve with Rear Shielded Safety Assembly
Outlet: 300 Bar DIN Type Outlet
Inlet: 7/8-14 UNF

PART NUMBER	SERVICE PRESSURE	GAS SERVICE	HANDWHEEL ORIENTATION
8082RH-5250	3500 psi	EAN Ready	Right Hand
8082LH-5250	3500 psi	EAN Ready	Left Hand

230 Bar H CONNECTOR

9020RH

9020LH

Type: Modular "H" Connector Attachment
Outlet: PRO Type Outlet
Gas Service: EAN Ready

Purpose: Allows Two Regulators to be attached to a Single Cylinder
Either regulator can be Isolated
Service Pressure: 230 Bar Maximum

8043RH with 9020RH

8043LH with 9020LH

300 Bar DIN H CONNECTOR

9040RH

Type: Modular "H" Connector Attachment
Outlet: 300 Bar DIN Outlet
Gas Service: EAN Ready

9040LH

Purpose: Allows Two Regulators to be attached to a Single Cylinder
Either Regulator can be Isolated
Service Pressure: 4350 psi Maximum

8063RH with 9040RH

8063LH with 9040LH

MANIFOLD CENTER BAR

8002 CTR W VLV

Type: Center Bar with Isolater Valve
Gas Service: EAN Ready
Service Pressure: 4350 psi Maximum
215 mm Center to Center Dimension of attached Valves

8004 CTR BAR

Type: Center Bar
Gas Service: EAN Ready
Service Pressure: 230 Bar Maximum
185 mm Center to Center Dimension of attached Valves

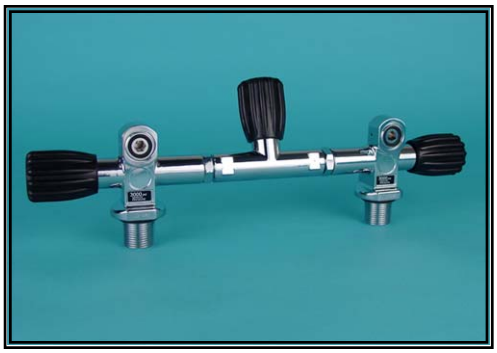

8043RH, 8043LH
With
8002 CTR W VLV

8063RH, 8063LH
With
8002 CTR W VLV

8043RH, 8043LH
With
8004 CTR BAR

EXPLODED VIEW

THERMO K

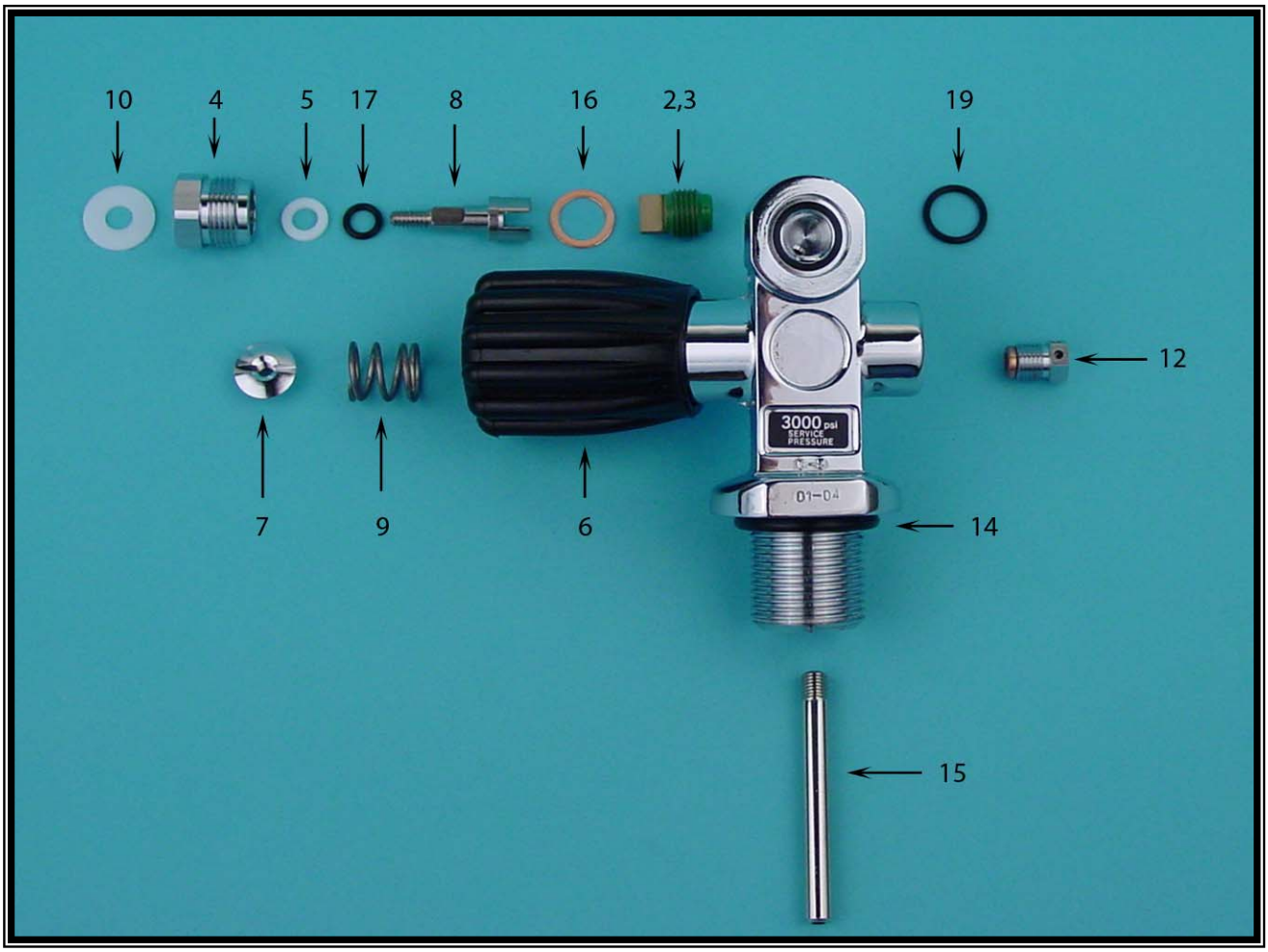

FOR 5251 SERIES

See Parts Index for Part Numbers

**See additional warnings and instructions at end of catalogue!*

EXPLODED VIEW

THERMO PRO, THERMO DIN

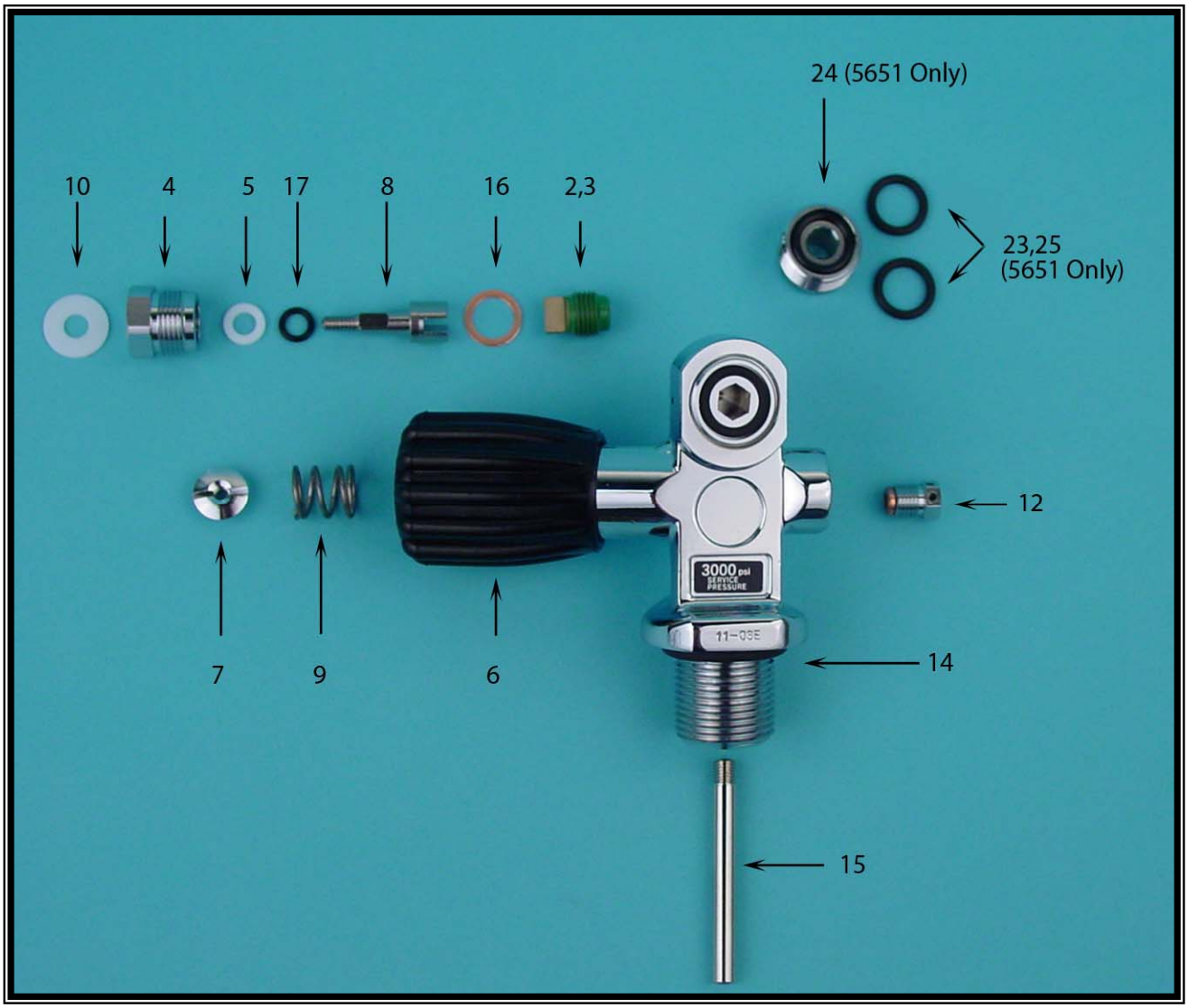

FOR 5651, 5262 & 5282 SERIES

See Parts Index for Part Numbers

**See additional warnings and instructions at end of catalogue!*

EXPLODED VIEW

THERMO MODULAR

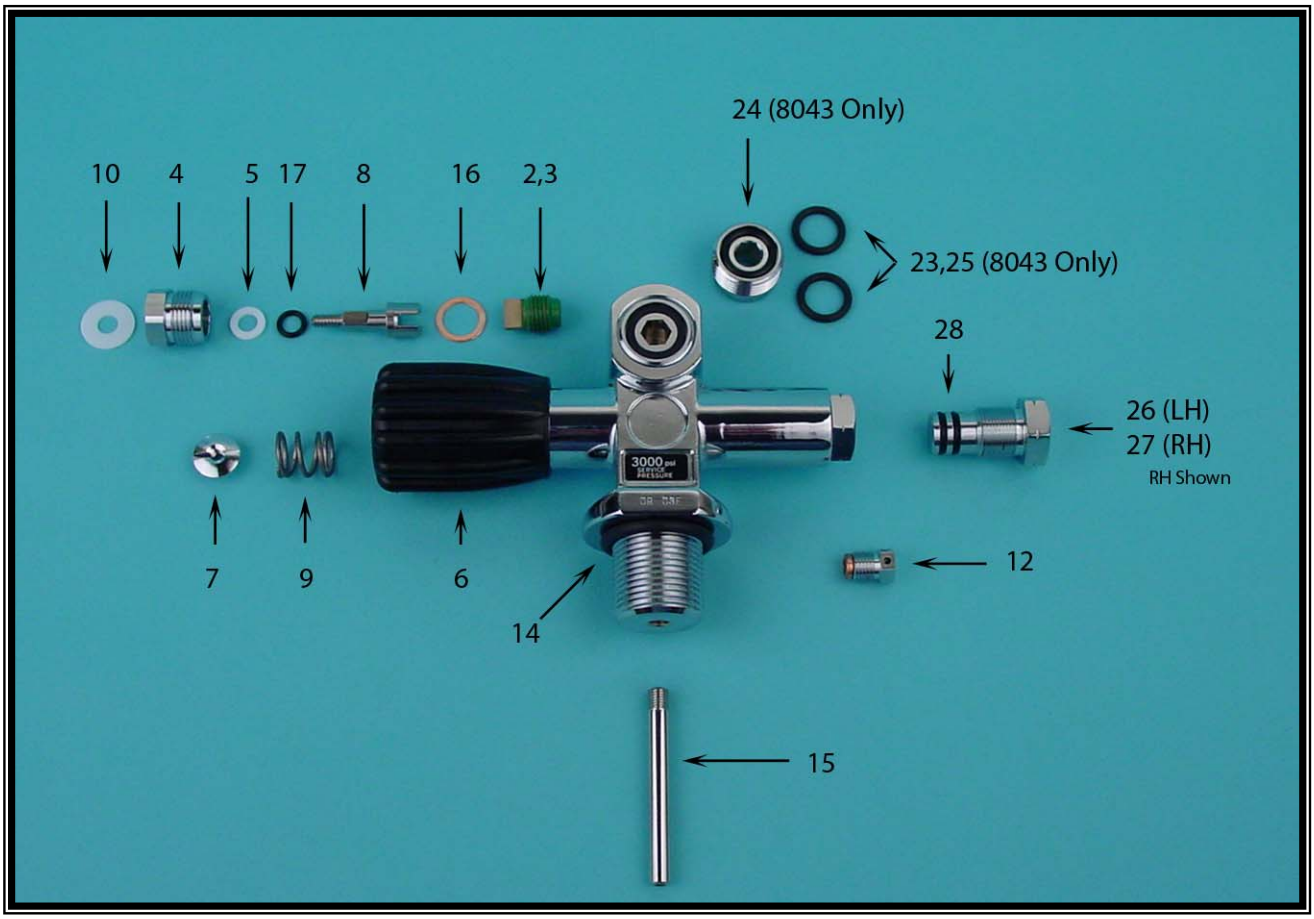

FOR 8043, 8063 & 8082 SERIES

See Parts Index for Part Numbers

**See additional warnings and instructions at end of catalogue!*

EXPLODED VIEW

THERMO H CONNECTOR

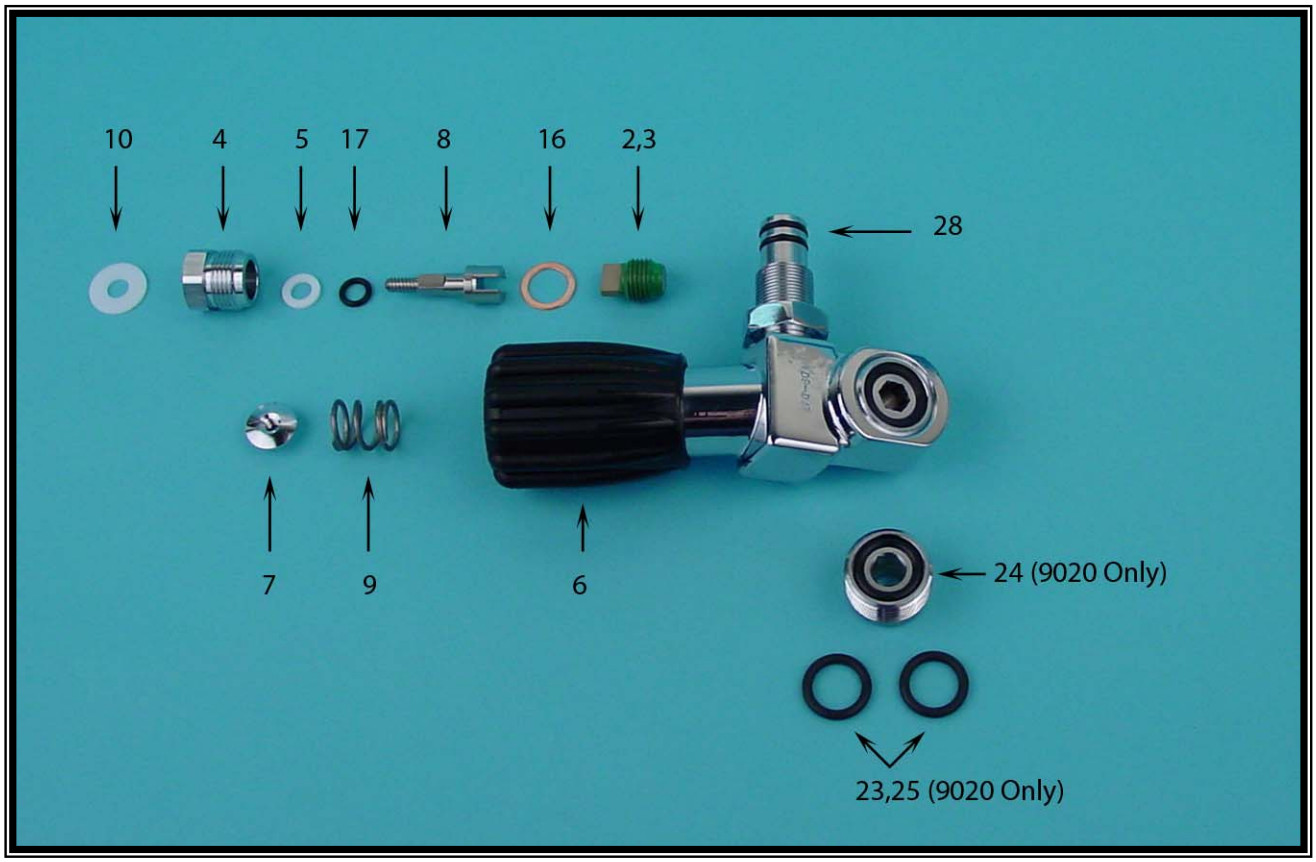

FOR 9020 & 9040 SERIES

See Parts Index for Part Numbers

**See additional warnings and instructions at end of catalogue!*

EXPLODED VIEW

THERMO MANIFOLD CENTER BAR

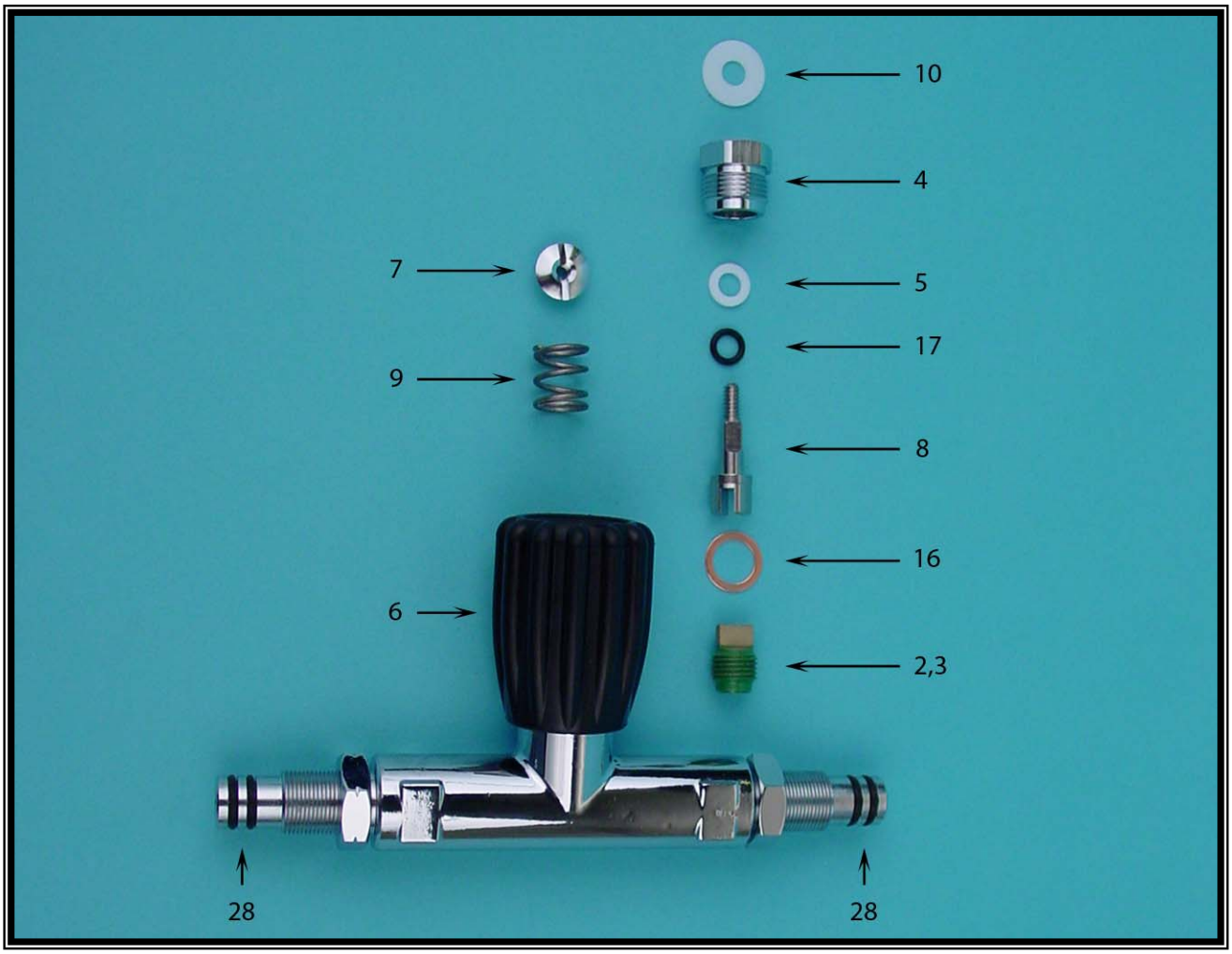

FOR 8002 CTR W VLV

See Parts Index for Part Numbers

**See additional warnings and instructions at end of catalogue!*

PARTS INDEX

ITEM	PART NUMBER	DESCRIPTION	SERVICE
2,3	5270-20N	PLUG & SEAT ASSEMBLY	EAN READY
4	5270-4PN	BONNET NUT, PLATED	EAN READY
5	5270-5N	PACKING	EAN READY
6	5240-6A	HANDWHEEL, EASY GRIP, BLACK	EAN READY/AIR
	5270-6AN	HANDWHEEL, EASY GRIP, GREEN	EAN READY
7	5203-7P	HANDWHEEL NUT	EAN READY
8	5270-8PN	STEM, PLATED	EAN READY
9	5240-9	SPRING	EAN READY
10	5240-10	HANDWHEEL WASHER	EAN READY
12	3990-3358N	SAFETY ASSEMBLY, 3358 PSI BURST FOR 2015 PSI SERVICE	EAN READY
	3990-3692	SAFETY ASSEMBLY, 3692 PSI BURST FOR 2215 PSI SERVICE	AIR
	3990-3750	SAFETY ASSEMBLY, 3750 PSI BURST FOR 2250 PSI SERVICE	AIR
	3990-4000N	SAFETY ASSEMBLY, 4000 PSI BURST FOR 2400 PSI SERVICE	EAN READY
	3990-4550N	SAFETY ASSEMBLY, 4550 PSI BURST FOR 2730 PSI SERVICE	EAN READY
	3990-5000N	SAFETY ASSEMBLY, 5000 PSI BURST FOR 3000 PSI SERVICE	EAN READY
	3990-5250N	SAFETY ASSEMBLY, 5250 PSI BURST FOR 3180 PSI FABER SERVICE PRESSURE OR 3442/3500 PSI PST SERVICE PRESSURE	EAN READY
	3990-5500	SAFETY ASSEMBLY, 5500 PSI BURST FOR 3300 PSI SERVICE	AIR
	3990-5500N	SAFETY ASSEMBLY, 5500 PSI BURST FOR 3300 PSI SERVICE	EAN READY
	3990-7250N	SAFETY ASSEMBLY, 7250 PSI BURST FOR 4350 PSI SERVICE	EAN READY
14	5240-14	O-RING, INLET, 3/4-14 NPSM	AIR
	5240-14V	O-RING, INLET, VITON, 3/4-14 NPSM	EAN READY
	5280-14	O-RING, INLET, 7/8-14 UNF	AIR
	5280-14V	O-RING, INLET, VITON, 7/8-14 UNF	EAN READY
15	5270-15N	TUBE, PLATED	EAN READY
16	5270-16N	BONNET GASKET	EAN READY
17	3100-9	O-RING, STEM	AIR
	3100-9V	O-RING, STEM, VITON	EAN READY
19	5240-12	O-RING, K OUTLET	AIR
	5240-12V	O-RING, K OUTLET, VITON	EAN READY
23,25	5440-23	O-RING, DIN/K ADAPTOR OUTLET	AIR
	5440-23V	O-RING, DIN/K ADAPTOR OUTLET, VITON	EAN READY
24	5440-23 ADAPTOR	PRO DIN/K OUTLET ADAPTOR	AIR
	5440-23N	PRO DIN/K OUTLET ADAPTOR	EAN READY
26	5440-21(LH)	MODULAR VALVE SIDE PLUG FOR LEFT HAND VALVE	AIR
27	5440-21(RH)	MODULAR VALVE SIDE PLUG FOR RIGHT HAND VALVE	AIR
28	5440-250	O-RING, SIDE PLUG	AIR
	5440-250V	O-RING, SIDE PLUG	EAN READY

SCUBA VALVE PARTS—PLEASE READ!

Thermo Valves scuba valve parts are for either Air service or for EAN ready service. The service is shown on the Thermo Valves Scuba Parts List which can be obtained from your distributor or from the Thermo Valves website.

A part intended for air service is designed for Thermo Valves breathing air scuba valves and may not be used for any other purpose. Valves with these parts are designed and intended for use only with Grade E breathing air (21% oxygen and 79% nitrogen by volume). DO NOT use this equipment with any other gas or enriched oxygen mixture above 21% oxygen. Failure to adhere to this warning may result in serious injury or death due to fire and explosion, or the serious deterioration or failure of the equipment.

A part intended for EAN ready service is designed for Thermo Valves EAN ready scuba valves or Thermo Valves breathing air scuba valves and may not be used for any other purpose. Valves with these parts may be used for either oxygen enriched breathing air with a maximum oxygen content of 40% OR Grade E breathing air (21% oxygen and 79% nitrogen by volume). Once the valve or parts are used for Grade E breathing air, they must be dedicated to breathing air service and MAY NOT be used for oxygen enriched breathing air. IF AT ANY TIME AN EAN READY VALVE OR PARTS ARE USED WITH GRADE E BREATHING AIR OR ANY GAS OTHER THAN OXYGEN ENRICHED BREATHING AIR, DO NOT USE THE VALVE OR PARTS FOR OXYGEN ENRICHED BREATHING AIR THEREAFTER!

Thermo Valves EAN ready scuba valve parts are to be operated, maintained and installed only by individuals who have been trained by a recognized agency in SCUBA Diving and in the use of oxygen enriched breathing air. Thermo Valves breathing air scuba valve parts are to be operated, maintained and installed only by individuals who have been trained by a recognized agency in SCUBA Diving.

Thermo Valves EAN ready scuba valve parts used for EAN service are to be installed only in Thermo Valves EAN ready series of scuba valves which have been maintained in an oxygen clean condition. If you are unsure if the Thermo Valves EAN ready series of scuba valves are still in an oxygen clean condition, DO NOT install the parts until the valve has been cleaned and tested according to Compressed Gas Association Pamphlet G-4.1 “CLEANING EQUIPMENT FOR OXYGEN SERVICE”.

Thermo Valves EAN ready series of scuba valves must be installed in cylinders which have been cleaned and tested for oxygen use. All other equipment attached to the valve which comes in contact with the oxygen enriched breathing air (regulator, BC, gauge panel, etc.) must also be approved by the manufacturer of the attachment for use with oxygen enriched breathing air.

If used with oxygen enriched breathing air, valve, cylinder and all attachments which come in contact with the oxygen enriched breathing air must be maintained in an oxygen clean condition. Any contamination by oil, grease, dust, or any contamination will cause a hazardous condition which could result in an explosion of the valve, cylinder, regulator or other equipment. If the valve and cylinder is contaminated by oil, grease, etc.., the valve and cylinder must be re-cleaned and tested for oxygen use by a competent facility and in accordance with Compressed Gas Association Pamphlet G-4.1 “CLEANING EQUIPMENT FOR OXYGEN SERVICE”.

In all cases, if a lubricant is used on the o-rings or upon insertion of the valve into a cylinder, only use lubricants approved for oxygen use.

Before attaching the regulator to the valve, open the valve slightly for an instant in order to clear the opening of particles of dust, dirt and to remove any moisture.

ALWAYS OPEN VALVE SLOWLY UNTIL PRESSURE BUILDS UP THROUGHOUT THE REGULATOR!

All Thermo Valves scuba valves and scuba valve parts are to be are to be used, installed and maintained according to Compressed Gas Association Pamphlet V-9 “STANDARD FOR COMPRESSED GAS CYLINDER VALVES”. All Thermo Valves EAN ready series of scuba valves and scuba valve parts must used and maintained according to Compressed Gas Association V-9 “STANDARD FOR COMPRESSED GAS CYLINDER VALVES” and Pamphlet G-4 “OXYGEN”.

Warnings, Terms and Conditions of Sale
Scuba Valves and Parts

These Terms and Conditions Supersede all Previous Terms and Conditions

Limited Warranty

Products of Thermo Valves Corporation are guaranteed against defects in material and workmanship for a period of one (1) year from the date of shipment from our warehouse. This warranty is limited to replacement or repairing, F.O.B. warehouse, any material which upon our inspection on our premises we find to be thus defective. Transportation charges on material returned must be prepaid.

Dimension and specifications of catalogued items are standard, and we shall adhere to these standards whenever possible, reserving, however, the right to make changes without notice.

Except as expressly stated above, Seller makes no warranty, expressed or implied, whether of merchantability or fitness for any particular purpose or use or otherwise, on any product, or on any parts or labor furnished during the sale, delivery or servicing of any product.

Limitation of Liability

Seller shall not be liable to the Buyer or to any other person, firm, or corporation for any incidental or consequential loss, damage, or injury arising out of any breach of warranty or any other act or default relating to Buyer's order or to products or services provided to Buyer, even if any such loss, damage, or injury is caused by Seller's negligence. The correction of defects as provided in the warranty statement above shall constitute Seller's full obligation with respect to all claims and Seller's liability shall in no event exceed the unit purchase price of the product in question.

Any lawsuit or other action based upon breach of this contract or upon any other claim arising out of this sale (other than an action by Seller for any amount due Seller by Buyer) must be commenced within one year from the date of the tender of delivery by the Seller or, in the case of cause of action based upon an alleged breach of warranty, within one year from date within the warranty period on which the defect is or should have been discovered by Buyer.

Notice of Claims

Immediately upon receipt of the goods, Buyer shall inspect the same. Any claims for shortage must be made within ten (10) days after Buyer's receipt. All other claims, including, but not limited to, for alleged defective goods, must be made within fifteen (15) days after Buyer learns of the fact upon which such claim is based.

Return of Material

Materials may not be returned for credit without our written permission. Returned material must be accompanied by instructions as to disposition.

Patents

Buyer will indemnify and defend Thermo Valves Corporation from and against any expense or loss resulting from infringements of patents or trademarks arising from compliance with designs, specifications or instructions furnished by Buyer.

Warnings, Terms and Conditions of Sale
Scuba Valves and Parts
Continued

These Terms and Conditions Supersede all Previous Terms and Conditions

Warning

In order to ensure proper and continued performance of Thermo products, regular inspection and maintenance is required to detect any corrosion or unusual wear of metallic and nonmetallic parts.

Unless a valve has an original manufacturer's label that states "NITROX USE ONLY" or has the letter "E" permanently stamped by the manufacturer after the manufacturing month and year on the valve body, all other Thermo scuba equipment is designed and intended for use only with clean, compressed atmospheric air (21% oxygen and 79% nitrogen by volume). DO NOT use this equipment with any other gas or enriched oxygen mixture above 21% oxygen. Use of other gases or enriched oxygen materials could result in death or serious injury, fire, explosion, or other serious deterioration or failure of the equipment.

If a valve has an original manufacturer's label that states "NITROX USE ONLY" or has the letter "E" permanently stamped by the manufacturer after the manufacturing month and year on the valve body, the following warnings apply:

This valve is to be operated, maintained and installed only by individuals who have been trained by a recognized agency in SCUBA Diving and in the use of oxygen enriched breathing air.

This valve is designed and tested for oxygen enriched breathing air with an oxygen content not to exceed 40% use only!

This valve must be installed in a cylinder which has been cleaned and tested for oxygen use according to CGA G-4.1.

Valve and cylinder must be maintained in an oxygen clean condition. Any contamination by oil, grease, etc.. will cause a hazardous condition which could result in an explosion of the valve, cylinder or regulator. If the valve or cylinder is contaminated by oil, grease, etc.., the valve and cylinder must be recleaned and tested for oxygen use by a competent facility and in accordance with Compressed Gas Association Pamphlet G-4.1 "CLEANING EQUIPMENT FOR OXYGEN SERVICE".

IF AT ANY TIME THIS VALVE IS USED WITH GRADE E BREATHING AIR OR ANY GAS OTHER THAN OXYGEN ENRICHED BREATHING AIR, DO NOT USE THE VALVE FOR OXYGEN ENRICHED BREATHING AIR THEREAFTER!

If a lubricant is used on the o-rings or upon insertion of the valve into a cylinder, only use lubricants approved for oxygen use.

Before attaching the regulator to the valve, open the valve slightly for an instant in order to clear the opening of particles of dust, dirt and to remove any moisture.

ALWAYS OPEN VALVE SLOWLY UNTIL PRESSURE BUILDS UP THROUGHOUT THE REGULATOR!

Valve is to be used and maintained according to Compressed Gas Association Pamphlet V-9 "STANDARD FOR COMPRESSED GAS CYLINDER VALVES" and Pamphlet G-4 "OXYGEN".

Notice

The terms and conditions set forth above are part of Thermo Valves Corporation's product(s). They may not be added to, modified, superseded, or otherwise altered, except by a written instrument signed by an Authorized representative of Thermo Valves Corporation. Please understand that by sending your purchase order or any other document for any product(s) offered for sale by Thermo Valves Corporation or accepting delivery for such product(s), you agree to the terms and conditions above. Any different or additional terms and conditions in your acceptance of this offer are objected to.

THERMO VALVES

Thermo Valves Corporation

3358 Coffey Lane, Suite C
Santa Rosa, CA 95403
USA

Phone: 707-575-6890
Fax: 707-575-6805
E-mail: sales@thermovalves.com
www.thermovalves.com