BAUER KOMPRESSOREN

INSTRUCTION MANUAL AND SPARE PARTS CATALOGUE

HIGH PRESSURE COMPRESSOR BLOCKS

K14 (350 bar)
IK140 (350 bar)
IK14.11 (500 bar)

BAUER KOMPRESSOREN GmbH
Postfach 710260 D-81452 München Tel. 089/78049-0 Fax 089/78049167

INTRODUCTION

This manual contains operating instructions and maintenance schedules for the high pressure compressor blocks

K14, IK140 and **IK14.11**

manufactured by Bauer Kompressoren GmbH, Munich, Germany.

WARNING

! Pneumatic high pressure system !

Non-compliance with the operating and service instructions can cause severe injury or death.

All instructions should be observed and carried out in the order laid down to prevent damage and premature wear to the equipment and the units served by it.

K14/09/97

Edition September 1997

TABLE OF CONTENTS

1. GENERAL 1

1.1. PURPOSE AND SHORT DESCRIPTION 1
1.2. DESIGN AND MODE OF OPERATION 1
1.3. TECHNICAL DATA 4

2. LUBRICATION SYSTEM 7

2.1. FUNCTIONAL DESCRIPTION 7
2.2. OIL LEVEL CHECK 7
2.3. TYPE OF OIL 7
2.4. OIL CHANGE INTERVALS 8
2.5. OIL CAPACITY 8
2.6. OIL PACKAGES 8
2.7. OIL CHANGE 8
2.8. OIL PRESSURE REGULATOR 8
2.9. VENTING OIL PUMP 9
2.10. OIL PUMP DRIVE 9

3. INTAKE FILTER 10

3.1. DESCRIPTION 10
3.2. INTAKE FILTER MAINTENANCE 10

4. INTERMEDIATE SEPARATORS 11

4.1. FUNCTIONAL DESCRIPTION 11
4.2. MAINTENANCE 11

5. FINAL STAGE SEPARATOR 12

5.1. K14, IK140 12
5.2. IK14.11 12

6. PRESSURE MAINTAINING / NON-RETURN VALVE 14

6.1. COMPRESSORS UP TO 350 BAR 14
6.2. MAINTENANCE 14
6.3. COMPRESSORS UP TO 500 BAR 14
6.4. MAINTENANCE 14

7. SAFETY VALVES 15

7.1. FUNCTIONAL DESCRIPTION 15
7.2. MAINTENANCE 15

8. PRESSURE GAUGES 16

8.1. DESCRIPTION 16
8.2. MAINTENANCE 16

9. VALVES 17

9.1. FUNCTIONAL DESCRIPTION 17
9.2. INITIAL OPERATIONAL CHECK OF VALVES 17
9.3. GENERAL INSTRUCTIONS FOR CHANGING THE VALVES 17
9.4. CHANGING THE VALVES OF THE 1ST STAGE 17
9.5. CHANGING THE VALVES OF 2ND / 3RD STAGE 17
9.6. CHANGING THE VALVES OF THE 4TH STAGE 19

10. AUTOMATIC CONDENSATE DRAIN 21

TABLE OF CONTENTS

10.1. K14 AND IK140 21
10.2. K14.11, IK14.11 22

11. ELECTRICAL SYSTEM 25

11.1. GENERAL 25

12. COMPRESSOR DRIVE SYSTEM 26

12.1. GENERAL 26

13. COOLING SYSTEM 27

13.1. GENERAL 27

14. SAFETY MEASURES 28

14.1. NOTES AND WARNING SIGNS 28
14.2. IDENTIFYING THE SAFETY NOTICES 29
14.3. FUNDAMENTAL SAFETY NOTICES 29
14.4. SAFETY REGULATIONS (Germany only) 31

15. INSTALLATION, OPERATION 34

15.1. INSTALLATION 34

16. MAINTENANCE SCHEDULE 35

16.1. maintenance intervals 35
16.2. MAINTENANCE RECORD 36

17. STORAGE, PRESERVATION 37

17.1. GENERAL 37
17.2. PREPARATION 37
17.3. PRESERVING THE COMPRESSOR 37
17.4. PRESERVING THE MOTOR/ENGINE 37
17.5. PREVENTIVE MAINTENANCE DURING STORAGE 37
17.6. REACTIVATING THE COMPRESSOR UNIT 37

18. REPAIR INSTRUCTIONS 38

18.1. GENERAL 38

19. TROUBLE-SHOOTING 39

20. TABLES 40

20.1. TIGHTENING TORQUE VALUES 40
20.2. TORQUE SEQUENCE 40
20.3. LUBRICATION CHART 41
20.4. ADHESIVE AND SEALANT CHART 41
20.5. TESTING AGENTS 41
20.6. CONVERSION TABLE bar - psi 42
20.7. CONVERSION TABLE psi - bar 43
20.8. TEMPERATURE CONVERSION TABLE 44
20.9. MISCELLANEOUS CONVERSION TABLES 45

21. ANNEX 47

TABLE OF FIGURES

Fig. 1 Compressor block . . . 2
Fig. 2 Air flow diagram . . . 3
Fig. 3 Lube oil circuit . . . 7
Fig. 4 Sight gauge markings . . . 7
Fig. 5 Oil pressure regulator . . . 8
Fig. 6 Venting the oil pump . . . 9
Fig. 7 V-belt tension . . . 9
Fig. 8 Oil pump drive . . . 9
Fig. 9 Intake filter . . . 10
Fig. 10 Intermediate separator . . . 11
Fig. 11 Oil and water separator . . . 12
Fig. 12 Oil and water separator, IK14.11 . . . 12
Fig. 13 Pressure maintaining/non-return valve KB 063838-341 . . . 14
Fig. 14 Pressure maintaining/non-return valve KB 068275-341 . . . 14
Fig. 15 Venting the final pressure safety valve . . . 15
Fig. 16 Safety valve IK14.11 . . . 15
Fig. 17 Valve operation . . . 17
Fig. 18 Valve head 1st stage . . . 17
Fig. 19 Valve, 2nd stage . . . 18
Fig. 20 Removing the intake valve . . . 18
Fig. 21 Unscrewing the cap nut . . . 18
Fig. 22 Removing the screw-in pressure plug . . . 19
Fig. 23 Securing the intake valve . . . 19
Fig. 24 Valve head 3rd stage . . . 19
Fig. 25 Removal of 3rd stage pressure valve . . . 20
Fig. 26 Automatic condensate drain unit . . . 21
Fig. 27 Normal operation . . . 21
Fig. 28 Condensate drain . . . 22
Fig. 29 Automatic condensate drain unit . . . 23
Fig. 30 Normal operation . . . 23
Fig. 31 Condensate drain . . . 24
Fig. 32 Torque sequence . . . 40

ANNEX

Drawings	
Compressor block K14, IK140 with automatic condensate drain	KB 064907-870
Compressor block K14, IK140 without automatic condensate drain	KB 064908-870
Compressor block IK14.11	KB 069300-870

Applicable parts lists:	
	Code
Compressor block	A2.8
Oil and water separator	B25
Automatic condensate drain, K14; IK140	C11
Automatic condensate drain, IK14.11	C25

Change notice

Changes which differ from the previous edition are marked with a vertical line.

Change No.	**Change date**
0	Basic edition September 1997

1. GENERAL

1.1. PURPOSE AND SHORT DESCRIPTION

The compressor blocks **K14** and **IK140** are used to compress air in the high pressure ranges PN 225 bar (3,200 psi) and PN 330 bar (4,700 psi), and for industrial application up to 350 bar (5,000 psi).

Compressor block **IK14.11** is designed for working pressures up to 500 bar (7,250 psi).

They are four stage, air-cooled reciprocating piston compressors. The cylinders are arranged in an X-form with 1st stage opposite 2nd stage and 3rd stage opposite 4th stage. The 4th stage cylinder is lubricated by means of the forced-feed lubrication system, the other cylinders are splash-lubricated.

The compressor blocks are particularly suitable for continuous operation because of their rugged design and the corrosion resistant intermediate separator and cooler assemblies. Smooth running is a particular feature of this **BAUER** design. The balance of masses of the 1st rank is zero. The moving parts of the driving gear are all equally balanced. This results in vibration-free running. The driving gear is fitted with three bearings. It is here that the energy saving cylinder roller bearings are put to use. The upper and lower connecting rod bearings are also roller bearings. This allows for an even longer life, at least 30,000 operating hours. All valves have free access for time saving maintenance. There is no need for dismantling of pipes or pressure gauges.

Depending on the type of application, these compressor blocks can be complemented with the proven filters, different types of drive motors and several control and monitoring units according to the specific needs of the customer. This instruction manual contains information on the compressor block only. For description of all other equipment forming part of the comrpessor unit, refer to the relevant compressor unit instruction manual.

1.2. DESIGN AND MODE OF OPERATION

The path of the air through the compressor system is shown in the air flow diagram, Fig. 2. For flow diagram and parts lists for special order units refer to the annex of this manual.

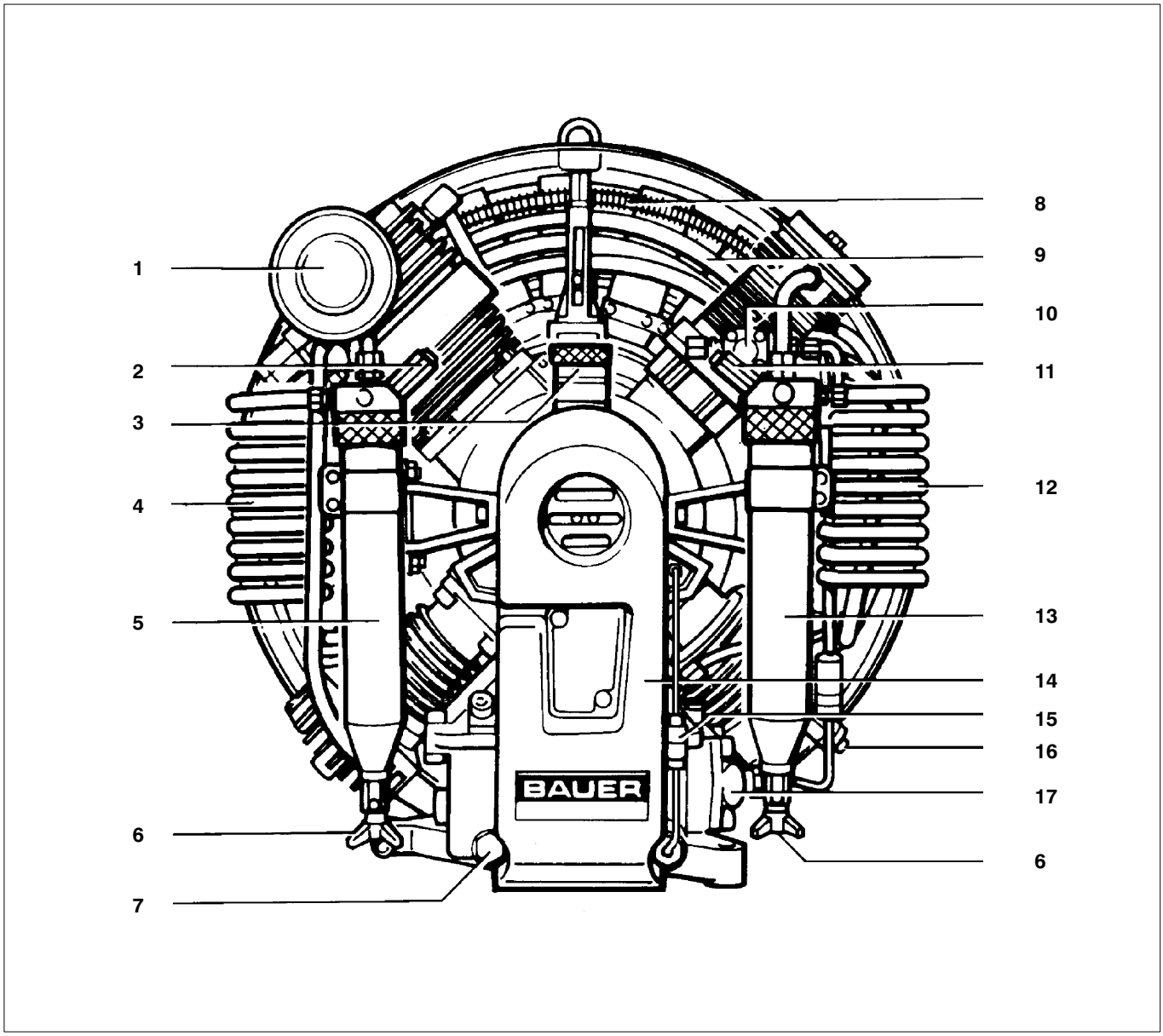

Fig. 1 Compressor block

1 Intake filter
2 Safety valve, intermediate pressure after 2nd stage
3 Oil filler
4 Inter-cooler after 2nd stage
5 Intermediate separator after 2nd stage
6 Manual condensate drain tap
7 Oil drain plug
8 After-cooler
9 Inter-cooler after 1st stage
10 Oil pressure regulating valve
11 Safety valve, intermediate pressure after 3rd stage
12 Inter-cooler after 3rd stage
13 Intermediate separator after 3rd stage
14 V-belt cover
15 Oil level sight gauge
16 Safety valve, intermediate pressure after 1st stage
17 Oil pump

1.2.1. Air flow diagram

The 1st stage of the compressor draws in atmospheric air through micronic intake filter (1). The air is then compressed to a pressure of approx. 4 bar (58 psi).

The compressed air entering the 2nd stage is cooled by inter-cooler (2). The air is further compressed to approx. 20 bar (290 psi) in the 2nd stage, then passes through inter-cooler (3) and intermediate separator (6) to the 3rd stage.

In the 3rd stage, the air is compressed to approx. 65 bar (943 psi). After the 3rd stage, the air passes through inter-cooler (4) and intermediate separator (7) before it arrives at the 4th stage.

In the 4th stage, the air is finally compressed to the applicable operating pressure of the compressor unit. It then passes through after-cooler (5) and is routed via pressure maintaining/ non-return valve (14) and outlet (15) to the filter system, if applicable.

The intermediate pressures of the individual stages are monitored by the intermediate pressure safety valves (10), (11) and (12). The final pressure is monitored by the final pressure safety valve (13, part of the filter system).
For description of the forced-feed lubrication system, refer to chapter 2.

For the function of the automatic condensate drain, refer to chapter 10.

For description of the compressor control and monitoring systems, refer to applicable compressor unit instruction manual.

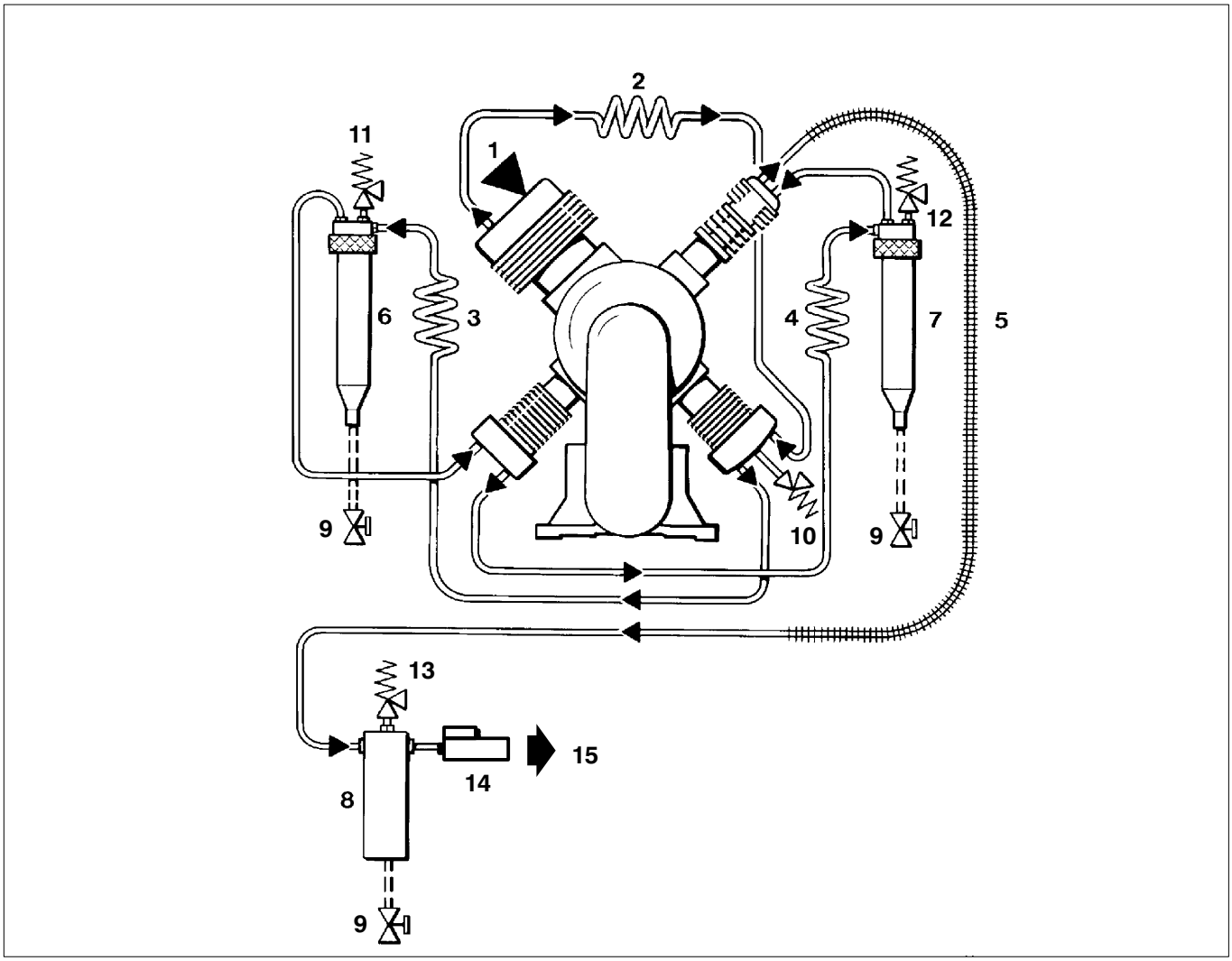

Fig. 2 Air flow diagram

1 Intake port
2 Inter-cooler after 1st stage
3 Inter-cooler after 2nd stage
4 Inter-cooler after 3rd stage
5 After-cooler
6 Intermediate separator after 2nd stage
7 Intermediate separator after 3rd stage
8 Oil and water separator[a)]
9 Manual condensate drain valve
10 Safety valve after 1st stage
11 Safety valve after 2nd stage
12 Safety valve after 3rd stage
13 Final pressure safety valve
14 Pressure maintaining/non-return valve
15 Air outlet

a) delivered separately with compressor block

1.3. TECHNICAL DATA

Compressor block	**K14, mod. 8**
Medium	Air
Delivery[a]	at 950 rpm ..... 210 l/min (7.4 cfm)
	at 1,300 rpm ..... 260 l/min (9.2 cfm)
	at 1,500 rpm ..... 320 l/min (11.5 cfm)
Intake pressure	atmospheric
Operating pressure, max.	350 bar (5,000 psi)
No. of stages	4
No. of cylinders	4
Cylinder bore 1st stage	88 mm
Cylinder bore 2nd stage	45 mm
Cylinder bore 3rd stage	22 mm
Cylinder bore 4th stage	12 mm
Piston stroke	50 mm
Speed	950 to 1,500 min^{-1}
Direction of rotation, viewing at flywheel	counter-clockwise
Drive input	4.0 to 7.5 kW
Intermediate pressure 1st stage	3 to 4 bar (44 to 58 psi)
Safety valve 1st stage	5,5 bar (80 psi)
Intermediate pressure 2nd stage	17 to 20 bar (250 to 290 psi)
Safety valve 2nd stage	24 bar (350 psi)
Intermediate pressure 3rd stage	58 to 65 bar (840 to 940 psi)
Safety valve 3rd stage	80 bar (1,150 psi)
Compressor block oil capacity	2.8 l (3 US qts)
Oil pressure, approx.	60 bar
Oil type	see chap. 2 lubrication
Max. ambient temperature	+5 ... +45 °C
	+41...+113 °F
Max. permissible inclination of compressor[b]	10°
Net weight, approx	54 kg (120 lb)

For dimensions, refer to drawing in the annex.

a) Free air delivered at tank filling from 0 to 200 bar.

b) These values are valid only if the oil level of the compressor in normal position corresponds to the upper mark of the oil dipstick and may not be exceeded.

Subject to change without prior notice

TECHNICAL DATA (Cont'd)

Compressor block	**IK140, mod. 8**
Medium	Air
Delivery[a)]	250 l/min (8.8 cfm)
Intake pressure	atmospheric
Operating pressure, max.	350 bar (5,000 psi)
No. of stages	4
No. of cylinders	4
Cylinder bore 1st stage	88 mm
Cylinder bore 2nd stage	45 mm
Cylinder bore 3rd stage	22 mm
Cylinder bore 4th stage	12 mm
Piston stroke	50 mm
Speed	1,200 min^{-1}
Direction of rotation, viewing at flywheel	counter-clockwise
Drive input	5.3 kW
Intermediate pressure 1st stage	3 to 4 bar (44 to 58 psi)
Safety valve 1st stage	7 bar (102 psi)
Intermediate pressure 2nd stage	17 to 20 bar (250 to 290 psi)
Safety valve 2nd stage	24 bar (350 psi)
Intermediate pressure 3rd stage	58 to 65 bar (840 to 940 psi)
Safety valve 3rd stage	80 bar (1,150 psi)
Compressor block oil capacity	2.8 l (3 US qts)
Oil pressure, approx.	60 bar
Oil type	see chap. 2 lubrication
Max. ambient temperature	+5 ... +45 °C
	+41...+113 °F
Max. permissible inclination of compressor[b)]	10°
Net weight, approx.	54 kg (120 lb)

For dimensions, refer to drawing in the annex.

a) Free air delivered at tank filling from 0 to 200 bar.

b) These values are valid only if the oil level of the compressor in normal position corresponds to the upper mark of the oil dipstick and may not be exceeded.

Subject to change without prior notice

TECHNICAL DATA (Cont'd)

Compressor block	**IK14.11, mod. 8**
Medium	Air
Delivery[a] at 750 rpm	150 l/min (5.5 cfm)
at 1,050 rpm	200 l/min (7 cfm)
at 1,200 rpm	240 l/min (8.5 cfm)
Intake pressure	atmospheric
Operating pressure, max.	500 bar (7,250 psi)
No. of stages	4
No. of cylinders	4
Cylinder bore 1st stage	88 mm
Cylinder bore 2nd stage	45 mm
Cylinder bore 3rd stage	22 mm
Cylinder bore 4th stage	10 mm
Piston stroke	50 mm
Speed	750 to 1,200 min^{-1}
Direction of rotation, viewing at flywheel	counter-clockwise
Drive input	3.5 to 6.3 kW
Intermediate pressure 1st stage	4 to 4.5 bar (58 to 65 psi)
Safety valve 1st stage	7 bar (102 psi)
Intermediate pressure 2nd stage	20 to 25 bar (290 to 363 psi)
Safety valve 2nd stage	28 bar (400 psi)
Intermediate pressure 3rd stage	65 to 105 bar (940 to 1,520 psi)
Safety valve 3rd stage	110 bar (1,600 psi)
Compressor block oil capacity	2.8 l (3 US qts)
Oil pressure, approx.	90 bar
Oil type	see chap. 2 lubrication
Max. ambient temperature	+5 ... +45 °C
	+41...+113 °F
Max. permissible inclination of compressor[b]	10°
Net weight, approx.	54 kg (120 lb)

For dimensions, refer to drawing in the annex.

a) Free air delivered at tank filling from 0 to 200 bar.

b) These values are valid only if the oil level of the compressor in normal position corresponds to the upper mark of the oil dipstick and may not be exceeded.

Subject to change without prior notice

2. LUBRICATION SYSTEM

2.1. FUNCTIONAL DESCRIPTION

The compressor is provided with forced-feed lubrication for the 4th stage (Fig. 3).

Injection pump (7) is driven by a camshaft via a V-belt. It pumps oil into the pressure regulator (4) at the 4th stage through an in-line oil filter (6). The oil pressure regulator doses the oil quantity and is adjusted to the respective oil pressure. Through holes in the piston liner (2) the oil is injected and lubricates the free-floating piston. It then flows through holes in the guide piston (3) into the crankcase. This oil is atomized by the drive gear and lubricates the other moving parts, such as crankshaft, connecting rods, cylinders and pistons and finally returns into the oil sump (1).

Surplus oil from the pressure regulator flows back to the crankcase through feedback tube (5).

Cylinder and piston of the 1st stage are additionally lubricated by oil vapours from the crankcase vent feedback line.

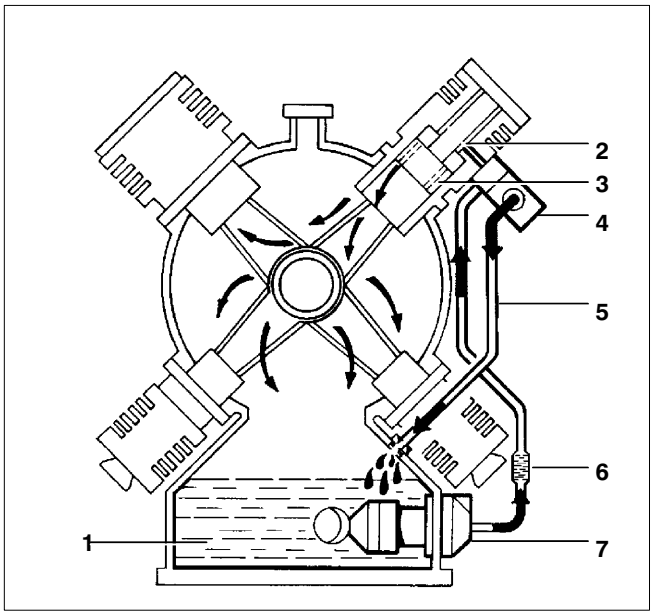

Fig. 3 Lube oil circuit

1 Oil sump
2 4th stage cylinder liner
3 Guide piston
4 Oil pressure regulator
5 Feedback tube
6 In-line oil filter
7 Injection pump

2.2. OIL LEVEL CHECK

Check oil level every day prior to putting compressor into operation. Check at oil level sight gauge, which must be between minimum and maximum marks, see Fig. 4.

Oil level must not fall below min. mark, nor exceed max mark as this could cause excessive lubrication of compressor and result in valves sooting up.

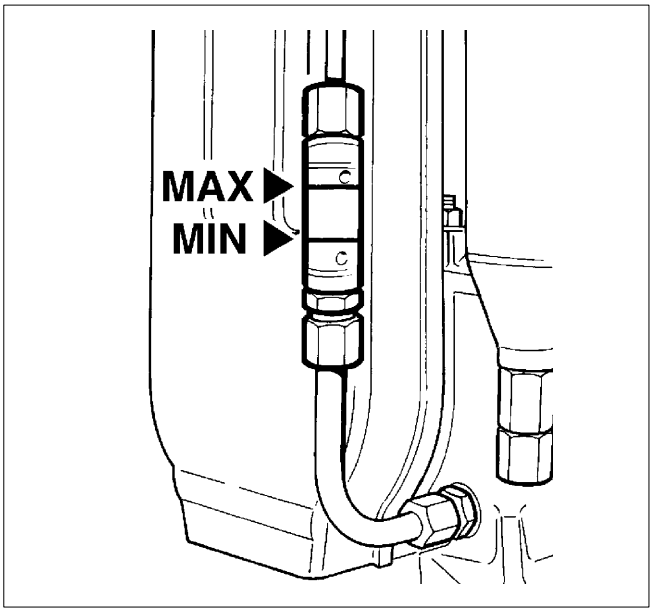

Fig. 4 Sight gauge markings

2.3. TYPE OF OIL

For proper care and maintenance of the compressor, using the correct oil is of vital importance. Depending on the application of the compressor the requirements placed on the oil are:

- low deposits
- no carbonizing effect, especially in the valves
- good anti-corrosive properties
- emulsification of the condensate in the crankcase
- for breathing air application, also physiological and toxicological suitability.

Due to the thermal load on the compressor only high quality oil should be used. You are recommended to restrict oils to those which have been approved by us and are listed in our lubricating oil list. This list can be found in the annex of this instruction manual and is up to date at the time of printing. For the latest edition, please contact BAUER Customer Services.

2.3.1. Synthetic lube oil

For operation under severe conditions such as continuous running and/or high ambient temperatures we recommend the following synthetic compressor oil, only:

Part No. N19745 (synthetic oil with corrosion protection)

This oil is tested in our compressors and has proved excellent quality under ambient temperatures between +5 °C (41 °F) and +45 °C (113 °F). For lower temperatures, a heating device is required which is capable of pre-heating the crankcase up to +5 °C (41 °F). The change intervals will be as shown in para. 2.4..

NOTE

All our compressor units are delivered with oil (which, depending on the model is filled into the crankcase, or separate in the consignment), part no. N19745.

2.3.2. Mineral lube oils

For operation under less severe conditions we can also recommend High Pressure Compressor Oil, part no. N 16725, due to its preservative properties and the price advantage in comparison to the synthetic oil. This oil meets the specifications of VD-L group 150 according to German standard DIN 51506. It is suitable for operation under ambient temperatures between +5 °C (41 °F) and +35 °C (95 °F). Here also, pre-heating is required for lower temperatures.

2.3.3. Changing the oil type

If you wish to use a mineral oil (e.g. part no. N16725) on later oil changes, no problems should arise, but:

CAUTION

To avoid severe damage to the compressor unit when changing from a mineral oil to a synthetic oil, the following measures should be strictly adhered to:

- Drain mineral oil completely while still warm.
- Change or clean valves, coolers, separators, purifiers, and all pneumatic tubes and hoses from deposits.
- Fill compressor with synthetic oil.
- After approx. 100 operating hours, check lubricating oil for degree of contamination, and change oil again if necessary.
- Perform subsequent oil changes according to para. 2.7.
- Refill compressor with synthetic oil only.

2.4. OIL CHANGE INTERVALS

every **1,000 operating hours**, at least annually	Part no. N16725
every **2,000 operating hours**, at least bi-annually	Part no. N19745

2.5. OIL CAPACITY

Oil capacity	approx. 2.8 liters

2.6. OIL PACKAGES

BAUER compressor oil is available in the following quantities:

Mineral oil N16725	
1l bottle	Part no. 070699
5l container	Part no. 070700
20l container	Part no. 070701

Synthetic oil N19745	
1l bottle	Part no. 070693
5l container	Part no. 070694
20l container	Part no. 070695

2.7. OIL CHANGE

NOTE

Change oil also prior to laying up the compressor.

- Run compressor warm.
- Drain oil while still warm by means of oil drain plug. On units equipped with oil drain hose remove hose union nut from coupling at hose bracket.
- To fill up with oil, remove cap from oil filler neck. Pour oil in slowly, wait additional 5 minutes, then put unit into operation.
- Check operation of oil pump. It is working properly if no air bubbles are visible in the oil pressure regulating valve sight glass. Vent pump if bubbles are visible, see para. 2.9.

2.8. OIL PRESSURE REGULATOR

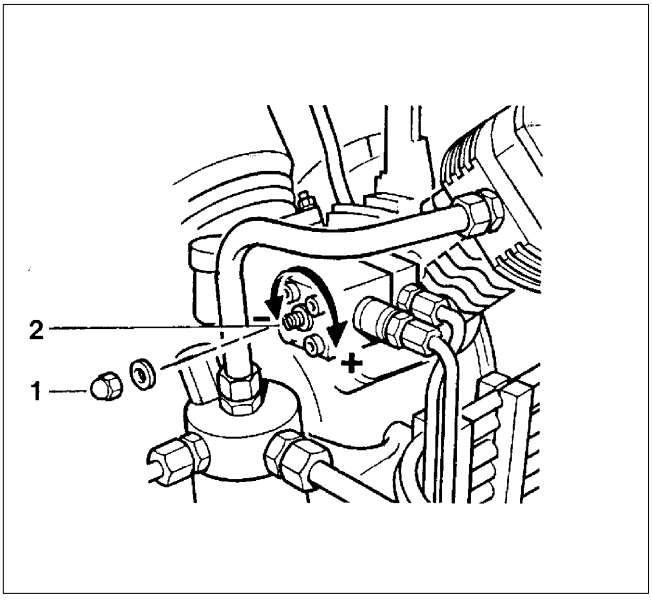

Fig. 5 Oil pressure regulator

The oil pressure regulator is mounted on the 4th stage cylinder and adjusted to **60 bar (870 psi)**. If necessary, the valve can be adjusted by removing cap nut (1) and turning the set screw (2) in the oil pressure regulator.

Turning screw clockwise increases pressure.

Turning screw counter-clockwise reduces pressure.

Read oil pressure from an oil pressure gauge connected to oil pressure regulator test connector.

On compressor block K14.11, the pressure regulator is controlled by the intermediate pressure of the 3rd stage. Here, no adjustment of the oil pressure is necessary.

2.9. VENTING OIL PUMP

If no or low oil pressure builds up after starting the unit- especially after maintenance or repair work - venting of the oil pump will be necessary. Proceed as follows:

- With the compressor running, unscrew screw plug (1) 2 - 3 turns and wait until the oil runs out free of air bubbles, see Fig. 6. Retighten the screw plug.
- Then, unscrew nut (2) 2 - 3 turns and wait until the oil runs out free of bubbles. Retighten the nut.

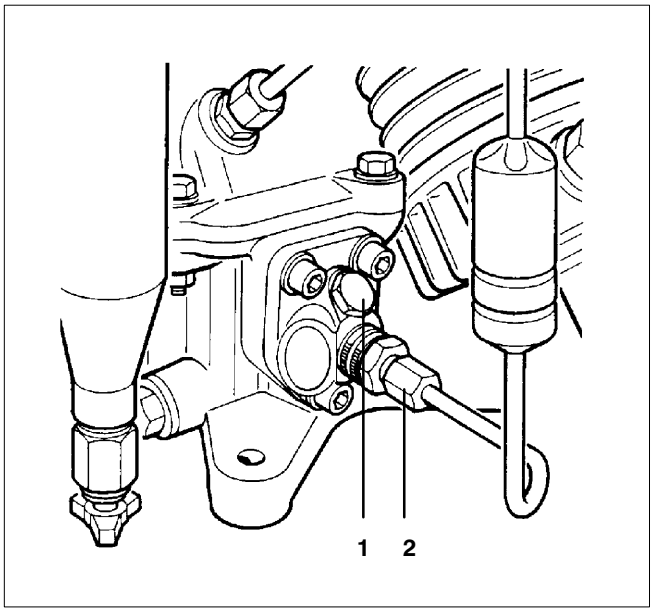

Fig. 6 Venting the oil pump

2.10. OIL PUMP DRIVE

The V-belt of the oil pump drive must be checked regularly for condition and tension, refer to chapter 16. for intervals.

CAUTION

Keep V-belt free from oil, grease, dirt, sand etc. Clean V-belt with dry cloth, do not use cleaning fluids or anything which is hazardous to respiration.

- At compressor block, remove two screws and take off V-belt plastic cover and metal plate.
- Check V-belt for wear, especially for cracks.
- Check tension of V-belt, which is correct if V-belt can be pushed approx. **5mm** under thumb pressure (Fig. 7). Otherwise adjust tension as follows.

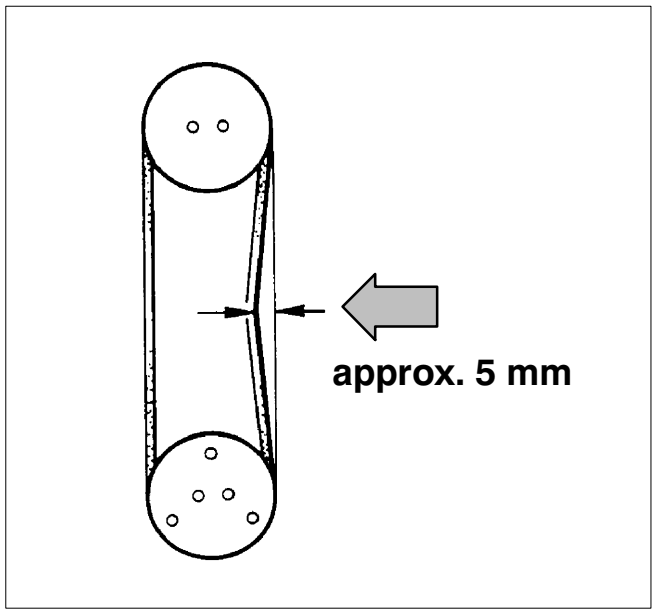

Fig. 7 V-belt tension

Tension of V-belt is adjusted by the V-belt pulley (1, Fig. 8) mounted on the eccentric shaft.

- Remove screws (4) and take off front part (3) of V-belt pulley.
- To increase tension, take shims (2) from rear part (1), to decrease, add shims.
- Replace front part and tighten screws (4) to a torque value of **10 Nm** (1 mkp).
- Run compressor for approx. **5 minutes**, then check tension again. Readjust as described above, if required.

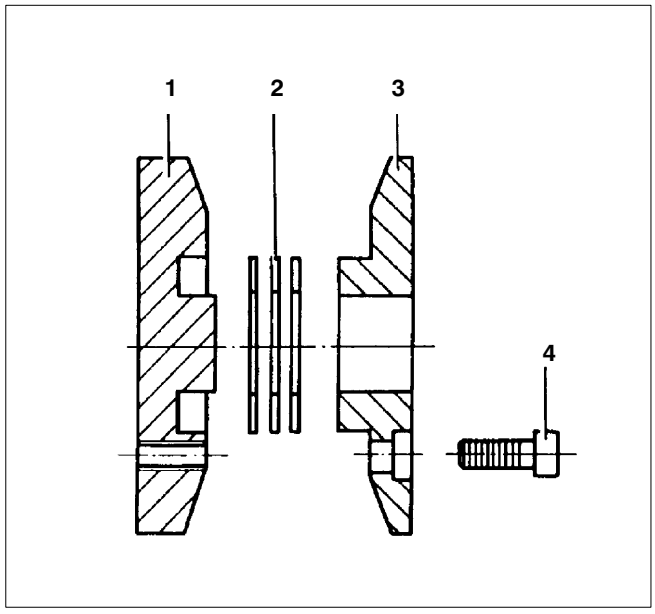

Fig. 8 Oil pump drive

3. INTAKE FILTER

3.1. DESCRIPTION

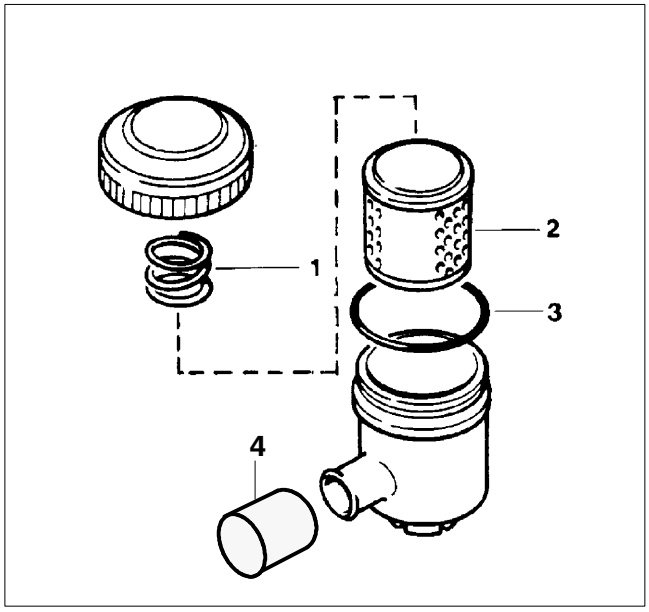

Fig. 9 Intake filter

A dry micronic filter is used to filter intake air Fig. 9.

3.2. INTAKE FILTER MAINTENANCE

Filter cartridge must be changed at regular intervals according to maintenance schedule in chapter 16.

To clean, remove micronic filter cartridge (2) and clean with brush or by blowing air inside out. Turn cartridge through 90° when replacing. Replace dirty cartridge once it has been turned three times and thus used on all sides.

Clean filter housing inside with a damp cloth. Take care to prevent dust from entering intake pipe. Replace O-ring (3) if necessary. When changing cartridge make sure spring (1) on top cover is installed properly.

With cap (4), part no. N 18234, the intake filter can be sealed for storage.

4. INTERMEDIATE SEPARATORS

4.1. FUNCTIONAL DESCRIPTION

Intermediate separators are mounted on the compressor between 2nd and 3rd stage, and between 3rd and 4th stage. These separators are designed to remove water and oil accumulating due to cooling the air down after the compression process. Separation is achieved by means of centrifugal action provided by a jet tube (intermediate separator after 2nd stage), or by a vortex plate (2) and a baffle (3). A sintered metal filter (4) is provided additionally in the separator between 3rd and 4th stage to remove dirt contamination, see Fig. 10.

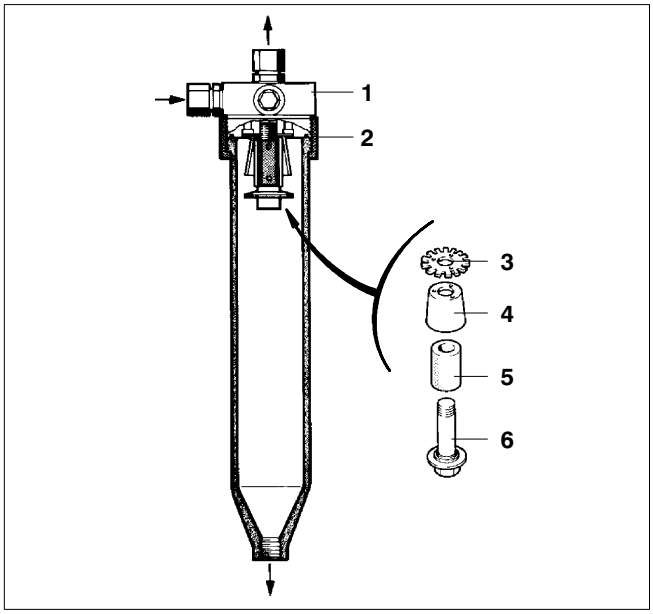

Fig. 10 Intermediate separator

4.2. MAINTENANCE

Proper operation of individual stages will rely on the intermediate separators being properly serviced.

Drain condensate every 15 to 30 minutes from these separators or ensure that the automatic condensate drain unit drains regularly. See section 10.

Clean sintered filter element as follows (for maintenance intervals refer to chapter 16):

- To remove sintered filter element, remove piping connected to filter head (1). Screw off union nut (2). Remove filter head along with sintered filter element.
- Remove centre screw (6), and separate sintered filter element (5), baffle cone (4) and vortex plate (3) from the filter head.
- To clean filter element, the best method is to use hot soapy water and to blow dry with compressed air.

5. FINAL STAGE SEPARATOR

5.1. K14, IK140

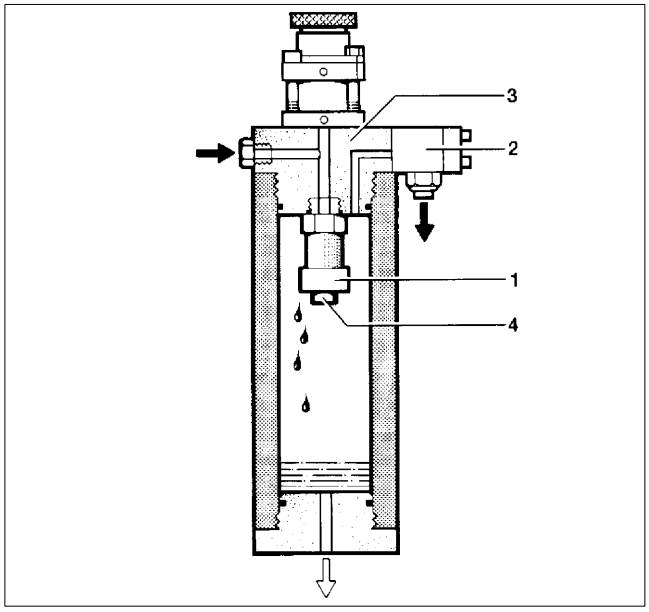

Fig. 11 Oil and water separator

The air leaving the final stage is cooled in the after-cooler to approx.10 to 15 °C (18-27 °F) above ambient temperature and then enters the oil and water separator (Fig. 11). The oil and water separator works by means of a sintered filter micro-cartridge (1), reliably separating liquid oil and water particles from the compressed air.

CAUTION

The oil and water separator is subject to dynamic load. It is designed to withstand up to 85,000 load cycles. (1 load cycle = 1 pressurization, 1 depressurization). After the max. number of load cycles have been reached, the separator must be exchanged.

The maximum recommended amount of four load cycles per hour should not be exceeded.

If it is possible to regulate the operation of the unit to such a degree as to achieve four load cycles per hour, in our opinion this would be an optimum between usage and actual life.

5.1.1. Final Separator Maintenance

The sinter-filter micro-cartridge requires periodic maintenance. Maintenance intervals see section 16.

To remove the sintered filter element proceed as follows:

- Remove tube connected to non-return valve (2).
- Screw off filter head (3) and remove.
- Unscrew micro-cartridge (1) from filter head (3).
- Remove centre-screw (4) to remove filter elements.
- Clean sintered filter elements using hot soapy water and blow dry with clean compressed air.

5.1.2. Condensate Drain

The condensate produced by the re-cooling after the compression process has to be drained regularly by means of the manual condensate drain valves

- before start-up of the compressor unit
- during operation dvery 30 minutes, at high humidity every 15 minutes.

For units equipped with an automatic condensate drain system refer to chapter 10.

5.2. IK14.11

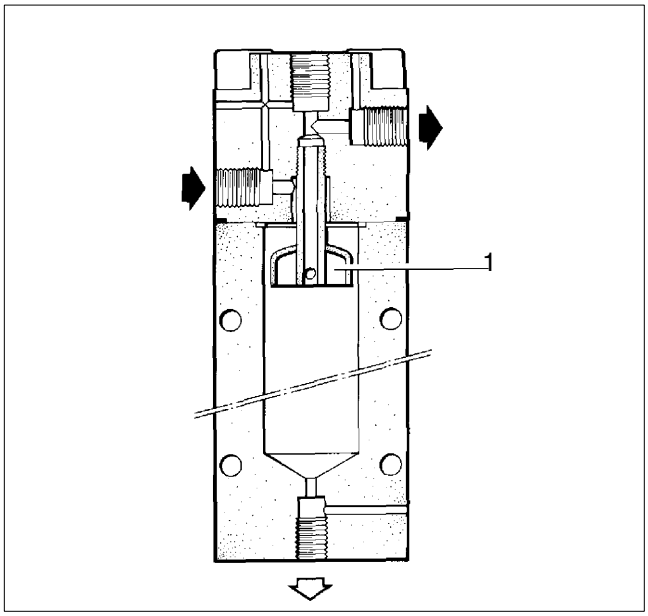

Fig. 12 Oil and water separator, IK14.11

The medium leaving the final stage is cooled in the after-cooler to approx.10 to 15 °C (18-27 °F) above ambient temperature and then enters the oil and water separator (Fig. 12). The separator reliably separates liquid oil and water contamination from the compressed air by means of a vortex plate (1).

CAUTION

The oil and water separator is subject to dynamic load. It is designed to withstand up to 360,000 load cycles at a max. pressure range of 500 bar. (1 load cycle = 1 pressurization, 1 depressurization.) The oil and water separator must be replaced when the maximum permissible no. of load cycles has been reached.

The maximum recommended amount of four load cycles per hour should not be exceeded.

If it is possible to regulate the operation of the unit to such a degree as to achieve four load cycles per hour, in our opinion this would be an optimum between usage and actual life.

5.2.1. Final Separator Maintenance

This type of separator does not require periodic maintenance.

5.2.2. Condensate Drain

The condensate produced by the re-cooling after the compression process is drained regularly by the automatic condensate drain system. Refer to chapter 10.

6. PRESSURE MAINTAINING / NON-RETURN VALVE

6.1. COMPRESSORS UP TO 350 BAR

A pressure maintaining and a non-return valve are provided downstream of the filter system. Depending on the model, the combination pressure maintaining/non-return valve is mounted on the frame of the compressor unit or on the outside of the housing. For the compressor block it is delivered separately.

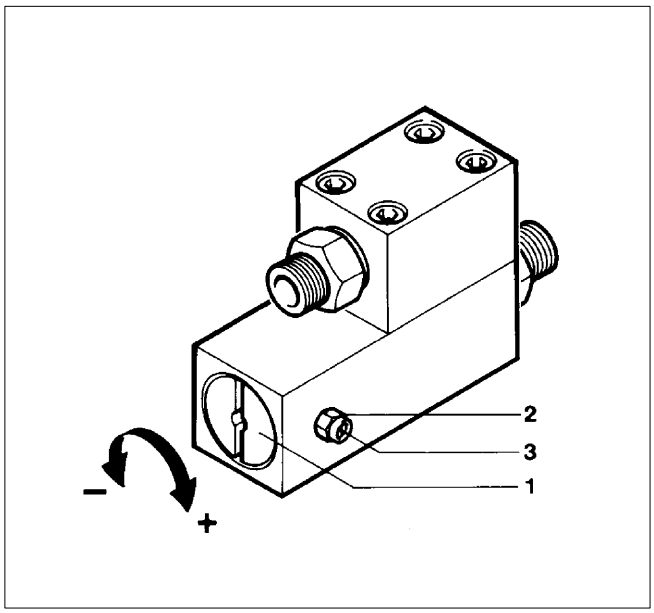

Fig. 13 Pressure maintaining/non-return valve PN350 bar

The pressure maintaining valve ensures that pressure is built up in the filters even from the start of delivery, thus achieving a constant, optimum filtration. It will also guarantee proper working conditions for the final stage cylinder.

For compressor units up to 350 bar working pressure, the pressure maintaining valve is adjusted to **150 ±10 bar (2,175 psi)**.

On units equipped with a filter system, an additional non-return valve is mounted after the oil and water separator - flanged directly to the filter head. It prevents already filtered medium from flowing back from the downstream filters when draining condensate from the oil and water separator.

6.2. MAINTENANCE

The pressure maintaining valve is adjusted at the factory to the required pressure and normally does not require regular maintenance or readjustment. In case of readjustment becoming necessary, loosen jam nut (2, Fig. 13) and set screw (3). Adjust screw (1) to the required pressure using a suitable screwdriver.

Clockwise = increase pressure
Counter-clockwise = decrease pressure

6.3. COMPRESSORS UP TO 500 BAR

On units with a maximum final pressure between 350 bar (5,075 psi) up to 500 bar (7,250 psi) the pressure maintaining/non-return valve Fig. 14 is mounted.

The pressure maintaining valve is adjusted to **280 ±10 bar (4,060 psi)**.

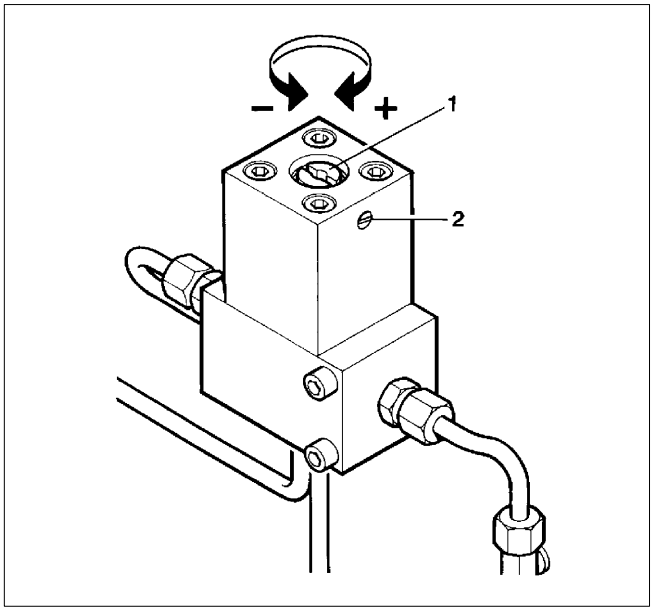

Fig. 14 Pressure maintaining/non-return valve PN500 bar

6.4. MAINTENANCE

The pressure maintaining valve is adjusted at the factory to the required pressure and normally does not require regular maintenance or readjustment.

In case of readjustment becoming necessary, loosen set screw (2, Fig. 14). Adjust screw (1) to the required pressure using a suitable screwdriver.

Clockwise = increase pressure
Counter-clockwise = decrease pressure.

7. SAFETY VALVES

7.1. FUNCTIONAL DESCRIPTION

All compressor stages are protected by safety valves as follows:

Compressor block	K14	IK140	IK14.11
1st stage	5.5 bar (80 psi)	7 bar (102 psi)	7 bar (102 psi)
2nd stage	24 bar (350 psi)	24 bar (350 psi)	28 bar (400 psi)
3rd stage	80 bar (1,150 psi)	80 bar (1,150 psi)	110 bar (1,600 psi)

The safety valve for protection of 4th stage is adjusted according to order, but

K14 to max. **350 bar (5,000 psi)**
IK140 to max. **350 bar (5,000 psi)**
IK14.11 to max. **500 bar (7,250 psi)**

The safety valves are sealed at the factory and adjusted to the corresponding pressure.

7.2. MAINTENANCE

If one of the intermediate pressure safety valves blows off, the valves in the next stage are not closing properly, affording valve check. The cause of the trouble is usually the inlet valve of the next stage. See chapter 9.

The final pressure safety valve must be checked for proper functioning from time to time. Pump unit to final pressure with shut-off valve closed until safety valve blows. Check blow-off pressure of safety valve at pressure gauge.

7.2.1. Testing the final pressure safety valve

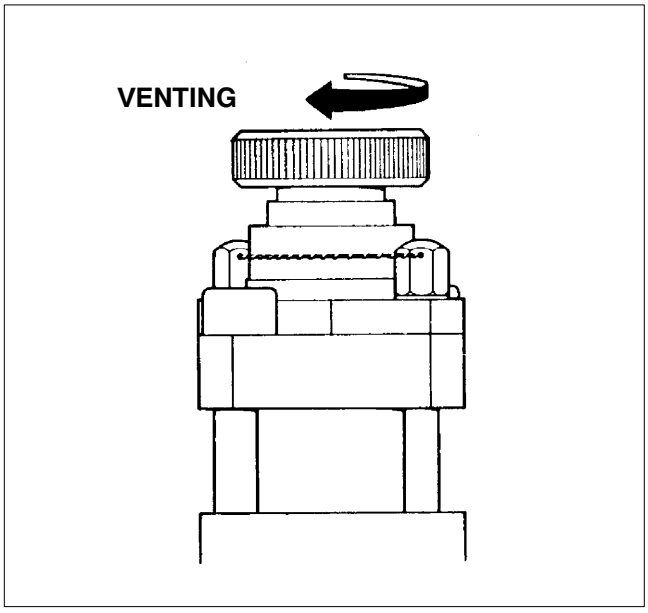

Fig. 15 Venting the final pressure safety valve

The final pressure safety valve has to be checked regularly before starting each filling process. See chapter 16.

For this purpose the safety valve can be vented manually. Turn knurled knob on top of the valve clockwise until valve blows off (Fig. 15). We recommend that a final pressure setting of 80 % should not be exceeded, to avoid damaging the safety valve.

This just ensures that the valve is functional and will release pressure in case of a malfunction. To check the blow-off pressure value refer to 7.2.3.

7.2.2. Operating check

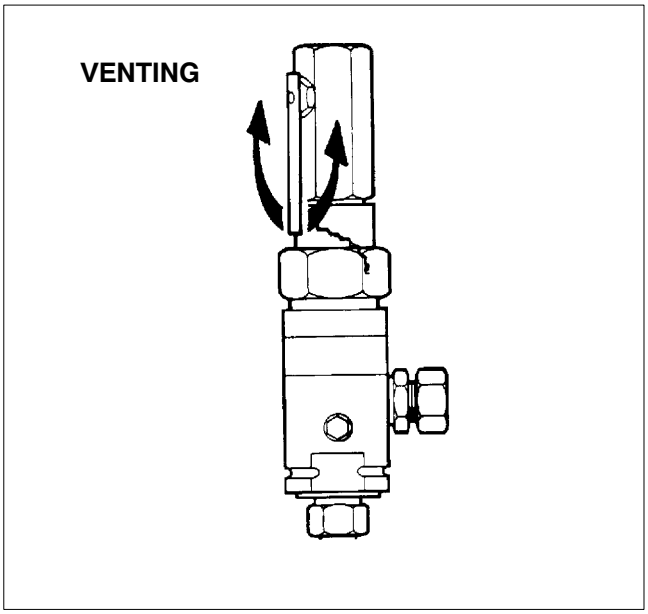

Fig. 16 Safety valve IK14.11

For the IK14.11, different safety valves are used. Lift lever on the valve until valve blows off (Fig. 16). We recommend that a final pressure setting of 80 % should not be exceeded, to avoid damaging the safety valve.

This just ensures that the valve is functional and will release pressure in case of a malfunction. To check the blow-off pressure value refer to 7.2.3.

7.2.3. Blow-off pressure check

Check blow-off pressure of the final pressure safety valve regularly, see maintenance schedule chapter 16. Pump unit to final pressure with shut-off valve closed until safety valve blows off. Check blow-off pressure of safety valve at pressure gauge.

On compressors fitted with a factory-installed compressor control unit, place ***service switch S3*** inside control box to ON (TEST) to override pressure switch.

8. PRESSURE GAUGES

8.1. DESCRIPTION

The pressure in the compressor stages can be monitored by means of the intermediate and the final pressure gauges. They are mounted on a common instrument panel which, depending on the type of unit, is fastened on a support to the frame, or integrated in the panelling.

NOTE

Pressure gauges are not delivered with compressor blocks.

8.1.1. Intermediate pressure gauges

Intermediate pressure gauges are optional for all K14, IK140 and IK14.11 compressor units. The following pressures should be indicated during operation.

Compressor Block	K14 and IK140	IK14.11
1st stage	3 ... 4 bar	4 ... 4.5 bar
2nd stage	17 ... 20 bar	20 ... 25 bar
3rd stage	58 ... 65 bar	65 ... 105 bar

8.1.2. Final pressure gauge

The final pressure gauge shows a red mark indicating the maximum operating pressure.

8.1.3. Oil pressure gauge

The instrument panel also includes the oil pressure gauge. Correct oil pressure indication should read **approx. 60 bar (850 psi)** for K14 and IK140, and **approx. 90 bar (1,300 psi)** for K14.11. If not, check the lube oil circuit or adjust the oil pressure. See section 2.

8.2. MAINTENANCE

If the values listed in 8.1 are exceeded and the safety valve of the corresponding stage blows off, this is an indication that the downstream compressor stage is not working properly. See paragraph 9.1.

If a pressure gauge indicates excessive pressure, and the corresponding safety valve does not blow off or indicates the pressure as being too low, check the pressure gauge for proper operation.

We recommend that pressure gauges are checked from time to time. For this purpose we have developed a special test pressure gauge with an adaptor which immediately recognizes any deviations in readings. See High Pressure Accessories Catalogue no. 8550.

Slight deviations during operation are normal and can be ignored. Excessive inaccuracy will require the pressure gauge to be readjusted or sent back for repair.

I100hor./03/96

9. VALVES

9.1. FUNCTIONAL DESCRIPTION

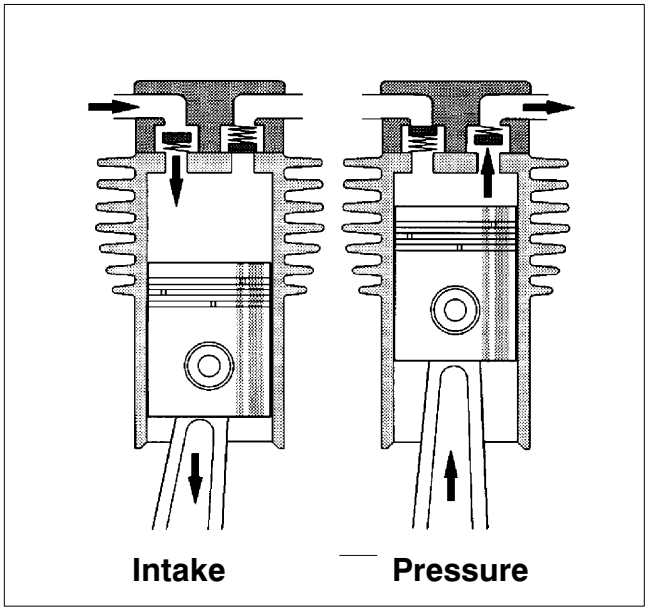

Fig. 17 Valve operation

The valve heads of the individual stages form the top part of the cylinders. The intake and pressure valves are fitted inside the valve heads.

Note that the valves are operated by the flow of the medium. On the suction stroke, the intake valves open and the medium flows into the cylinders. At the start of the compression stroke the intake valve closes and the medium opens the pressure valve, Fig. 17.

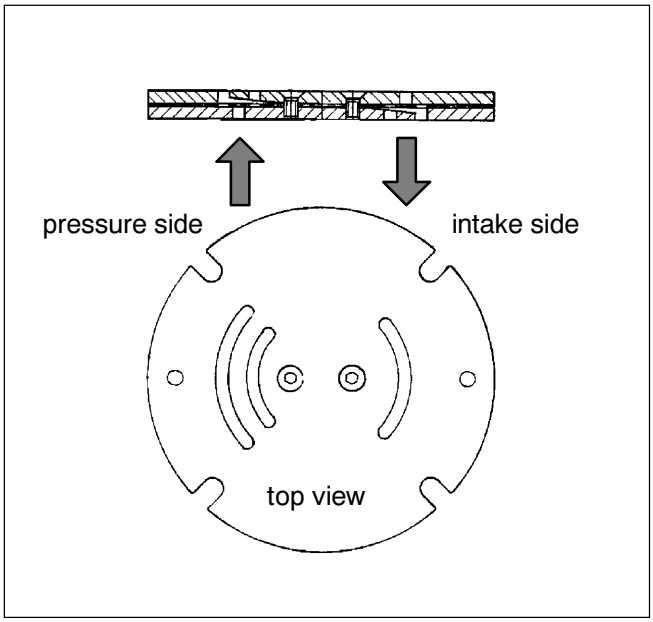

Fig. 18 Valve head 1st stage

Intake and pressure valve of the 1st stage is a combined plate valve under the valve head (Fig. 18).

9.2. INITIAL OPERATIONAL CHECK OF VALVES

After roughly half an hour's operation, valves should be checked. Note that the intake line to the valve heads should be warm and outlet piping should be hot. Valves are then operating properly.

If the intake pipe to the valve head of the second stage heats up excessively, and the first stage safety valve blows off, either the intake or pressure valve of second stage is malfunctioning. It is therefore necessary to remove the valve head and to check and clean these valves, or to replace them.

9.3. GENERAL INSTRUCTIONS FOR CHANGING THE VALVES

- **Always replace** valves as a complete set.
- **Carefully clean** dirty valves. Never use a sharp tool for this purpose. Soak the valves in diesel oil or petroleum and clean with soft brush.
- **Check** individual components for excessive wear. If the valve seat and valve disks are dented, replace the valves.
- **Valve head screws** must be tightened with a torque wrench (see tightening torque values chapter 20).
- **Check** the valve space in the valve heads for dirt and clean, if necessary.
- **Use only** satisfactory gaskets and O-rings on reassembly.
- **Observe** the correct sequence when fitting together again.
- **After finishing** all maintenance work on the valves, turn the compressor manually using the flywheel and check whether all items have been correctly installed.
- **30 minutes after restarting** the compressor unit stop unit, let it cool down to ambient temperature and retighten valve studs and cap nuts. Otherwise valves could work loose due to setting of the gaskets.
- **Remove and check** the valves every **1000 operating hours.**
- **Replace** the valves every **2000 operating hours** to avoid fatigue failure.

9.4. CHANGING THE VALVES OF THE 1ST STAGE

Intake and pressure valves of the 1st stage are combined in one plate valve under the valve head. Check that the mark "TOP" is really at the top when installed.

9.5. CHANGING THE VALVES OF 2ND / 3RD STAGE

- Unscrew the intake and pressure lines from the cylinder head (7, Fig. 19).
- Remove internal hex. screws fixing cylinder head and completely remove the cylinder head from the cylinder.
- Insert two metal pins - 8 mm diameter , any length - in the holes in the cylinder head and secure these in a vice with the cylinder head on top.
- Unscrew the intake valve body with the special tool (part no. 4555-645, part of the tools set delivered with the unit) (Fig. 20).

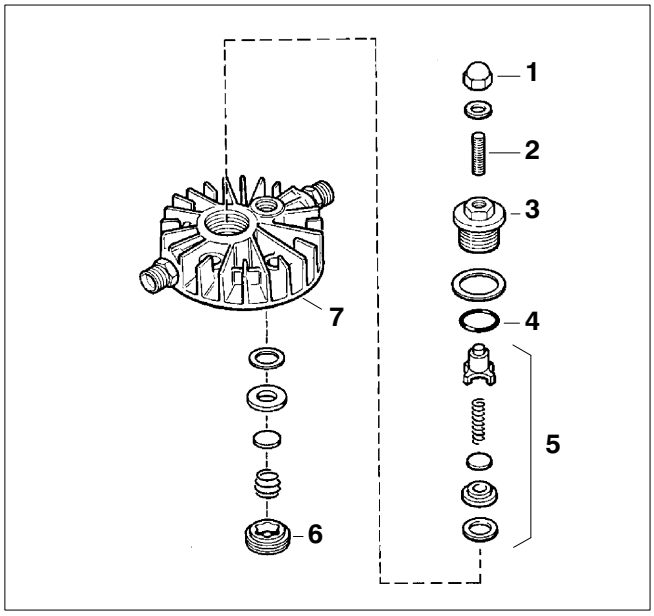

Fig. 19 Valve, 2nd stage

CAUTION

In order to avoid damaging the special tool or the valve when using the tool, ensure that it is pushed properly and firmly into the valve bore so that it will not tilt when it is turned.

- Turn the cylinder head and replace it on the metal pins.
- Unscrew the cap nut (1, Fig. 19) refer to Fig. 21.
- Unscrew stud (2) approx. 5 turns.

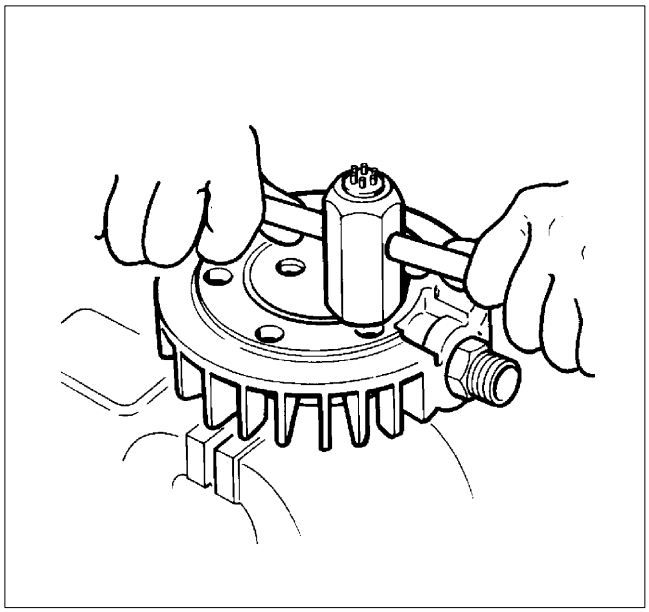

Fig. 20 Removing the intake valve

- Unscrew screw-in pressure plug (3), take out the pressure valve parts.
- Clean intake and pressure valves and check for wear.

NOTE

Valve seats and plate valves must not show any signs of wear or damage. Replace damaged parts.

- Clean and check valve springs. Compare their dimensions with the values in the following table.

Valve stroke	min.	max.
Intake valve	1.0 mm	1.25 mm
Pressure valve	1.0 mm	1.25 mm
Valve spring	**Normal length**	
Intake valve	9 - 10.5 mm	
Pressure valve	21 - 24 mm	

NOTE

Replace damaged and worn parts.

- Check O-ring (4), replace if necessary.

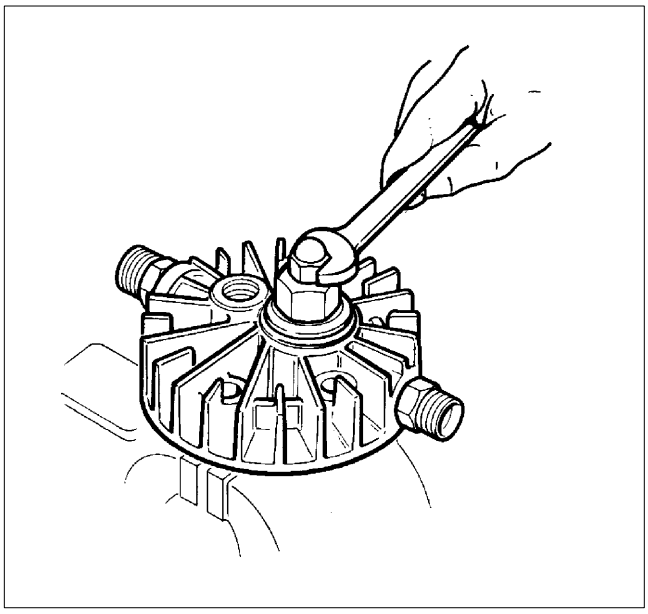

Fig. 21 Unscrewing the cap nut

- Clean cylinder head. Check that the intake and pressure valve bores are in perfect condition.
- Check with a precision straightedge that the underside of the cylinder head is flat, if necessary use an emery cloth to smooth out the surface.

Assembly:

- Screw the intake valve in with the special tool and tighten.

CAUTION

Valve spring and valve plate must not be jammed.

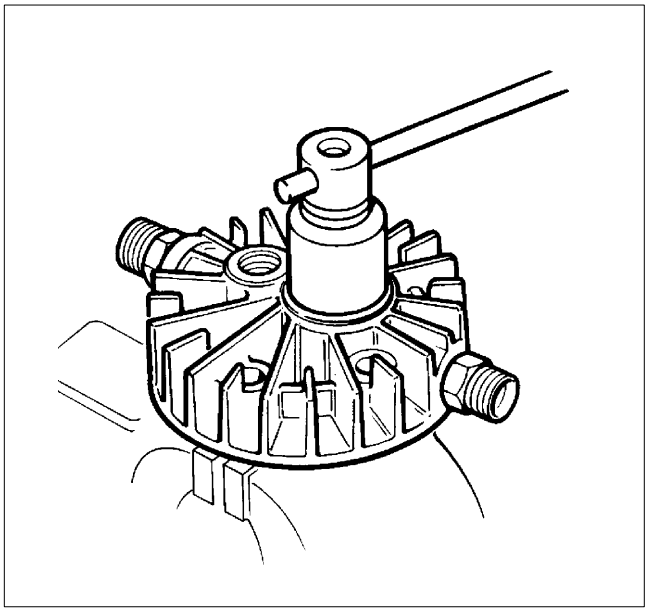

Fig. 22 Removing the screw-in pressure plug

Check valve function. To do so, blow compressed air through the valve in the direction of flow.

- Secure the intake valve as follows:
  Peen the cylinder head aluminium on the screw-in thread of the intake valve in two places opposite one another with a small drift pin, diameter approx. 5 mm (Fig. 23).
- Insert the pressure valve parts and the O-ring.

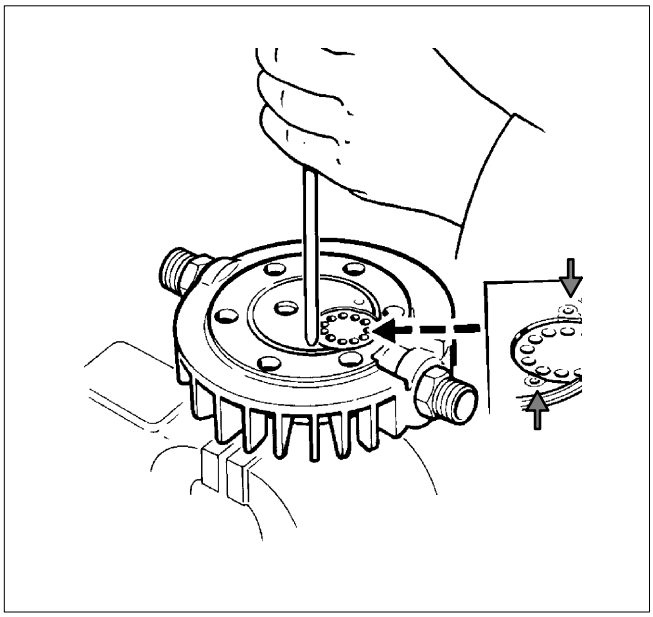

Fig. 23 Securing the intake valve

NOTE

Check the pressure valve function and stroke by lifting the valve plate.

- Screw in the screw-in pressure plug with a pressure pad and tighten.

NOTE

Ensure that the stud is unscrewed.

- Screw in the stud firmly, fit a new gasket and secure with the cap nut.
- Put the cylinder head on the cylinder and secure it with the internal hex. screws, for the correct torque value, see chapter 20.
- Reconnect the intake and pressure lines.

9.6. CHANGING THE VALVES OF THE 4TH STAGE

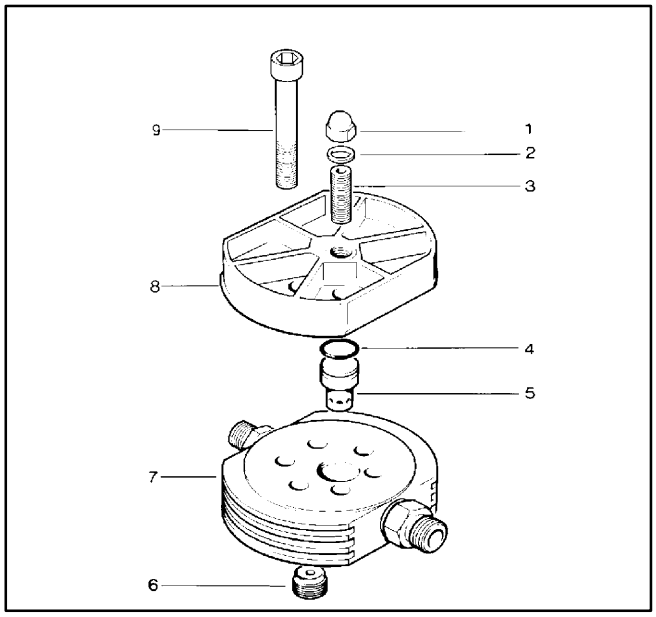

Fig. 24 Valve head 3rd stage

For removal and installation of the intake valve use special tool (part no. 4555-645) which is also part of the tools set delivered with the unit. Pressure valve (5) is merely inserted into valve head (7). It is sealed by O-ring (4) and fixed to the valve head by stud (3).

CAUTION

Change intake and pressure valves of 4th stage together, only.

Removal and reinstallation of 3rd stage pressure valve (Fig. 24).

- Remove acorn nut (1), rewind stud (3) up to three or four turns.
- Remove internal hex. screw (9) fixing valve head (7), take off valve head cover (8).
- Put two screwdrivers into the groove of outlet valve body, see Fig. 25. If necessary loosen valve first by using a 13 mm spanner on the flat surfaces.
- Lift out pressure valve (5) together with O-ring (4).

Reinstall pressure valve (5) in reverse sequence:

- Put O-ring (4) into valve head (7). Check O-ring for abrasions.
- Insert pressure valve (5). Put on valve head cover (8).

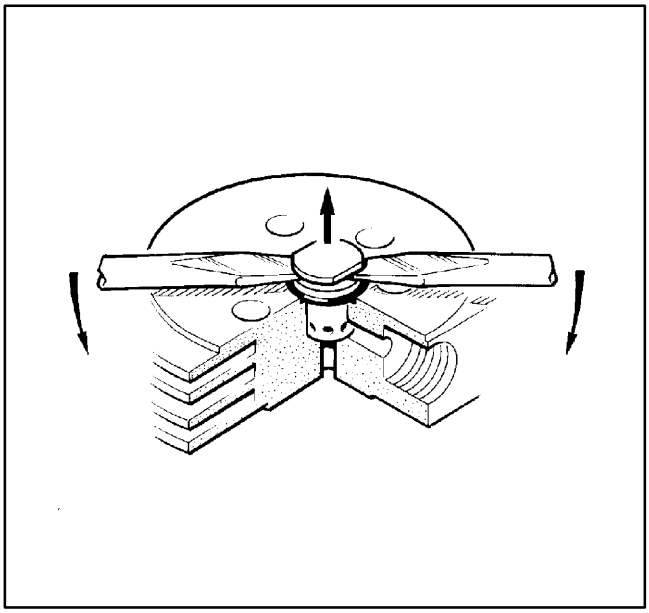

Fig. 25 Removal of 3rd stage pressure valve

- Fix valve head (7) with allen screws. Observe torque values, see chapter 20.
- Screw in and fasten stud (3).
- Put on gasket (2).
- Screw on acorn nut (1).

10. AUTOMATIC CONDENSATE DRAIN

10.1. K14 AND IK140

The automatic condensate drain unit (Fig. 26) drains the intermediate separators after the 2nd and 3rd stage, and the oil and water separator after the 4th stage every 15 minutes during operation.

In addition, the automatic condensate drain is designed to drain these separators after shut-down of the compressor unit and to unload the compressor during the starting phase, see sections 10.1.3. and 10.1.4.

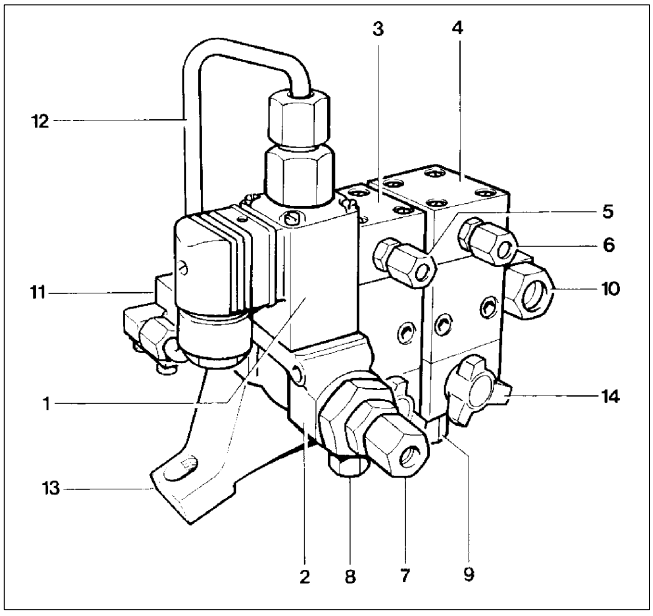

Fig. 26 Automatic condensate drain unit

1 Solenoid valve coil
2 Solenoid valve, condensate drain 2nd stage intermediate separator
3 Condensate drain valve intermediate separator after 3rd stage
4 Condensate drain valve oil and water separator
5 Control air connection from 2nd stage
6 Control air connection from 3rd stage
7 Condensate connection from intermediate separator after 2nd stage
8 Condensate connection from intermediate separator after 3rd stage
9 Condensate connection from oil and water separator
10 Condensate outlet (tube connector)
11 Condensate manifold
12 Vent line solenoid valve - manifold
13 Bracket
14 Manual condensate drain valve

The automatic condensate drain system operates electro-pneumatically and comprises the following main items:

- One solenoid valve, normally open type, functioning as condensate drain valve for the 2nd stage
- Two pneumatically operated condensate drain valves, normally open type, one for the intermediate separator after the 3rd stage and one for the oil and water separator after the last stage
- A condensate manifold
- A condensate separator/silencer
- A condensate tank
- A bracket for mounting the drain unit on the compressor block or on the unit
- An electrical timer (part of compressor control assy).

10.1.1. Operation

All positions refer to Fig. 27.

The normally open condensate drain valves are connected in cascade mode. The condensate from the intermediate separator after the 2nd stage is applied to the solenoid valve. The solenoid valve is normally open.

The condensate from the intermediate separator after the 3rd stage and from the oil and water separator is led to the respective pneumatically operated condensate drain valves.

The required control air for the 3rd stage intermediate separator drain valve is taken from the intermediate separator after the 2nd stage. The control air for the oil and water separator drain valve is taken from the intermediate separator after the 3rd stage. Before compressor start-up, the solenoid valve (4) is open and so are the condensate drain valves (5) and (6) because there is no control air available at this moment.

At start-up of the compressor, the solenoid valve is energized and closes: due to build-up of pressure by compressor operation, control air flows into condensate drain valves (5) and (6). The servo-pistons (7) are pressed onto valve seats (8) and the condensate drain valves close.

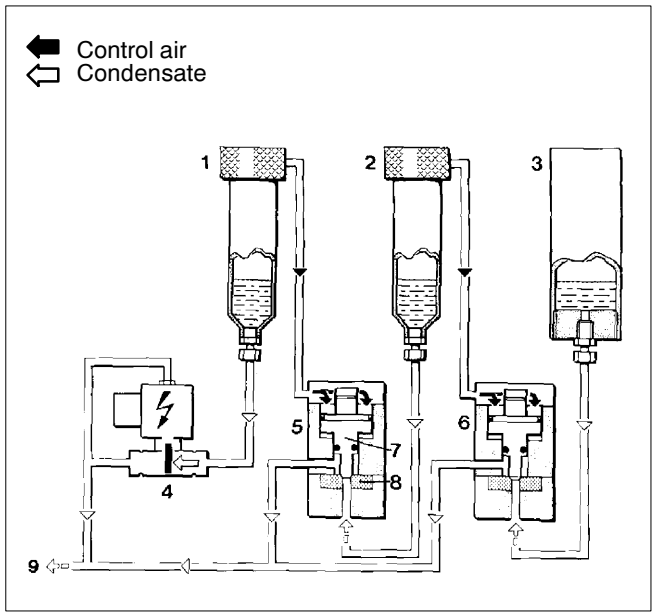

Fig. 27 Normal operation

1 Intermediate separator after 2nd stage
2 Intermediate separator after 3rd stage
3 Oil and water separator after 4th stage
4 Solenoid valve condensate drain 2nd stage
5 Condensate drain valve 3rd stage
6 Condensate drain valve 4th stage
7 Servo piston
8 Valve seat
9 Condensate outlet

10.1.2. Condensate drain

All positions stated refer to Fig. 28.

Every 15 minutes, 3/2-way solenoid valve (4) is deenergized for approx. 10 seconds by the timer.

Solenoid valve (4) opens and drains the condensate from the 2nd stage intermediate separator (1). Due to the pressure loss in intermediate separator (1) the control pressure for condensate drain valve (5) for intermediate separator (2) is also removed. The servo-piston (7) of the condensate drain valve for the intermediate separator is unloaded, and the control pressure vented through the relief port.

The piston (7) of the drain valve is raised by pressure from the intermediate separator (2), the valve opens and condensate is drained. Because of the resulting pressure loss within the intermediate separator (2), the control pressure for the condensate drain valve (6) for the oil and water separator (3) is removed and the condensate drain valve (6) drains as described above.

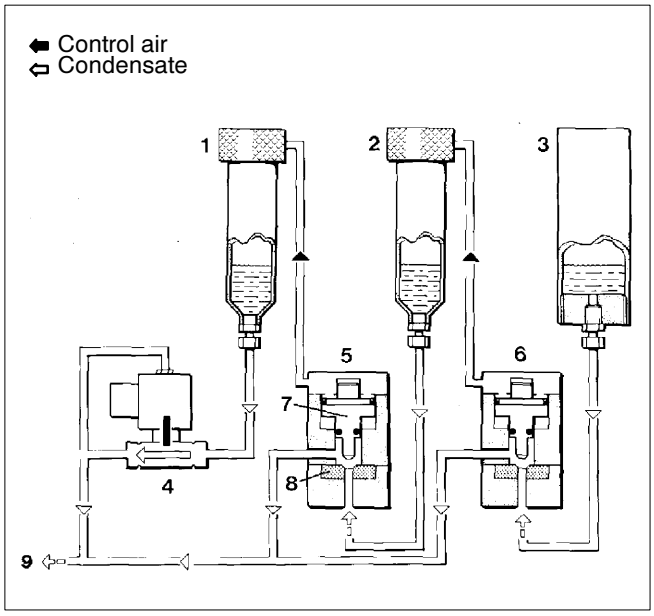

Fig. 28 Condensate drain

1 Intermediate separator after 2nd stage
2 Intermediate separator after 3rd stage
3 Oil and water separator after 4th stage
4 Solenoid valve condensate drain 2nd stage
5 Condensate drain valve 3rd stage
6 Condensate drain valve 4th stage
7 Servo piston
8 Valve seat
9 Condensate outlet

10.1.3. Start unloading

The unloading during the starting phase of the compressor is effected due to the lack of control air immediately after switching on the unit. After the compressor has attained nominal speed, control air flows to the condensate drain valves which close and the compressor starts delivering to the consuming device.

10.1.4. Standstill drainage

At compressor shut-down, solenoid valve (4) is deenergized and opens.

The servo pistons are raised by the residual pressure within the separators. The valves open, and the separators are drained at standstill of the compressor unit.

10.1.5. Condensate drain piping

The outlet opening of the condensate drain manifold is equipped with a tube connector. Here, a condensate drain pipe may be connected (already provided on KAP units).

Due care must be taken to ensure that any oil which may be drained with the condensate will not pollute the environment. For example, the drain pipe can be directed into a collecting vessel or into drain facilities incorporating oil separators.

10.1.6. Maintenance

The condensate drain valves for the intermediate separator after 3rd stage and for the oil and water separator are provided with manual drain valves to check correct operation of the automatic system.

The automatic condensate drain system must be serviced as follows:

- Open all manual drain valves (14, Fig. 26) one after the other, once a week.
- This must be carried out immediately after the automatic system has drained the condensate. Observe the drainage of condensate when opening the manual drain valves. If the system drains a lot of condensate this is a sign that the system or the corresponding condensate drain valves are not working properly. Find the fault and remedy accordingly.

If hardly any condensate emerges, the automatic system is operating properly. For fault correction, see section 19 "Troubleshooting".

10.2. K14.11, IK14.11

The automatic condensate drain unit (Fig. 29) drains the intermediate separators after the 2nd and 3rd stage, and the oil and water separator after the 4th stage every 15 minutes during operation.

In addition, the automatic condensate drain is designed to drain these filters after shut-down of the compressor unit, and to unload the compressor during the starting phase, see section 10.2.3. and 10.2.4.

The automatic condensate drain system operates electropneumatically and comprises the following main items:

- Three pneumatically operated condensate drain valves, one each for the intermediate separators after 2nd and 3rd stage, and one for the oil and water separator after the last stage. The condensate drain valves for the intermediate separators after the 2nd and 3rd stage are of the normally open type, the one for the oil and water separator after the last stage is closed without control medium being applied (normally closed type).

- Two solenoid valves for control medium, normally closed type, mounted on top of the condensate drain valves for the 2nd and 4th stage drain valves.
- A condensate manifold.
- Two electrical timers. The timers do not operate synchronously i.e. 1st, 2nd/3rd and 4th stage are drained periodically at equal time intervals, but not at the same time.

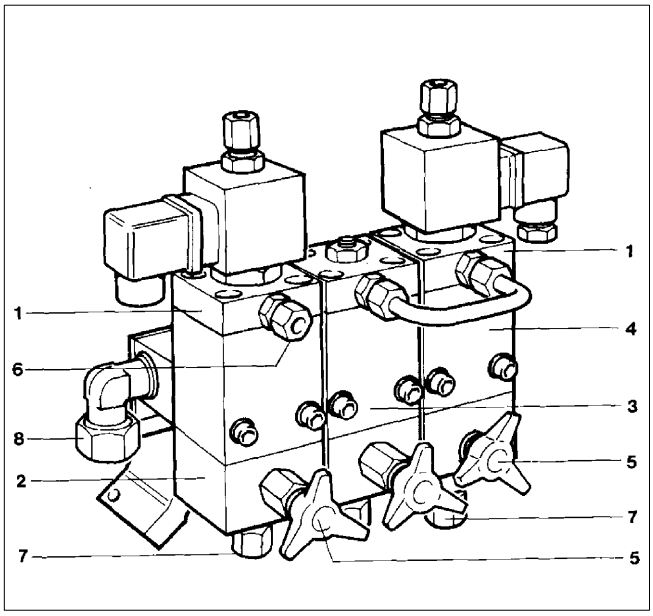

Fig. 29 Automatic condensate drain unit

1 3/2 way solenoid valve
2 Condensate drain valve intermediate separator after 2nd stage
3 Condensate drain valve intermediate separator after 3rd stage
4 Condensate drain valve oil and water separator
5 Manual condensate drain valve
6 Control medium connection
7 Condensate inlet
8 Condensate outlet

10.2.1. Operation

All positions refer to Fig. 30.

The condensate drain valves are operated pneumatically via a normally closed 3-way solenoid valve by an electrical signal. The required control medium applied to the solenoid valve is taken from the intermediate separator after the second stage.

Before compressor start-up, condensate drain valves (1) and (2) are open, (3) is closed by spring pressure.

After start-up of the compressor, i.e. after the star-delta starter has switched from star to delta phase, 3/2-way solenoid valve (4) is energized and opens, 3/2-way solenoid valve (5) is not energized and remains closed. So the control medium is applied to condensate drain valves (1) and (2), only. The servo-pistons (6) are pressed onto the valve seats (7) and the condensate drain valves close.

The condensate drain valve (3) is not pressurized by the control medium. It remains closed by spring pressure and due to the pressure build-up of the compressor.

The compressor delivers compressed medium to the connected systems.

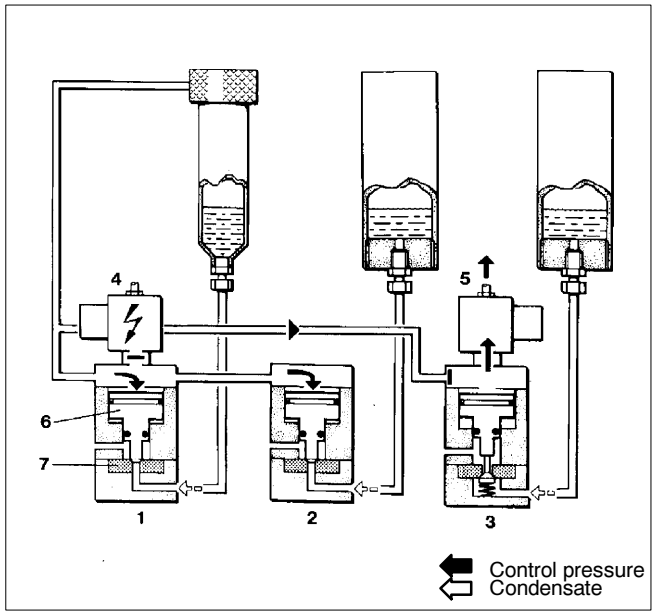

Fig. 30 Normal operation

1 Condensate drain valve 2nd stage
2 Condensate drain valve 3rd stage
3 Condensate drain valve 4th stage
4 3/2-way solenoid valve, 2nd/3rd stage
5 3/2-way solenoid valve, 4th stage
6 Servo-piston
7 Valve seat

10.2.2. Condensate drain

All positions stated refer to Fig. 31.

Every 15 minutes, 3/2-way solenoid valve (4) is deenergized for approx. 10 seconds by the timer and closes. The control pressure is relieved from the servo-piston (6) of the condensate drain valves (1) and (2) and the pistons (6) are raised from the valve seats (7) by the 2nd stage pressure. The condensate

from the intermediate separators after 2nd stage (1) and 3rd stage (2) are drained.

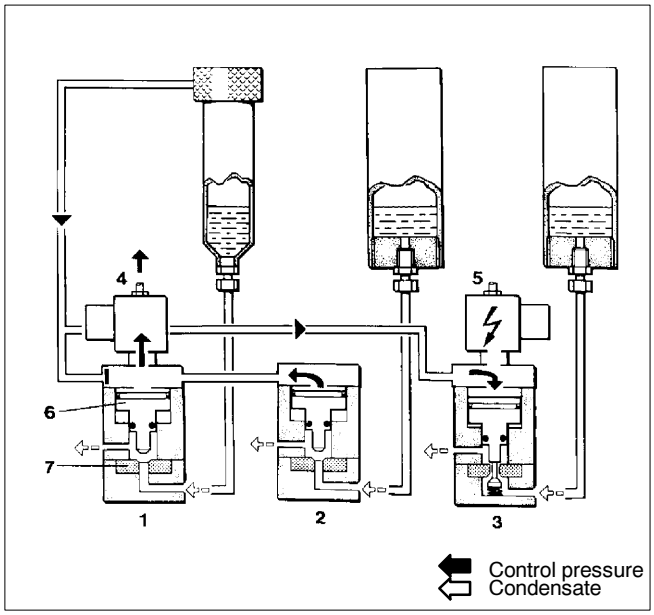

Fig. 31 Condensate drain

1 Condensate drain valve 2nd stage
2 Condensate drain valve 3rd stage
3 Condensate drain valve 4th stage
4 3/2-way solenoid valve, 2nd/3rd stage
5 3/2-way solenoid valve, 4th stage
6 Servo-piston
7 Valve seat

Also every 15 minutes, but independently from solenoid valve (4), 3/2-way solenoid valve (5) is energized for approx. 3 seconds by the second timer and opens. The control pressure pushes down the servo-piston (6) of the condensate drain valve (3), the piston is raised from valve seat (7) and the condensate from the oil and water separator after the last stage is drained.

10.2.3. Start unloading

The unloading during the starting phase of the compressor is effected due to the lack of control air immediately after switching on the unit. After the compressor has attained nominal speed, control air flows to the condensate drain valves which close and the compressor starts delivering to the consuming device.

10.2.4. Standstill drainage

At compressor shut-down, solenoid valve (4) is deenergized and opens.

The servo pistons are raised by the residual pressure within the separators. The valves open, and the separators are drained at standstill of the compressor unit.

10.2.5. Condensate drain piping

Compressor block:

The outlet opening of the condensate drain manifold is equipped with a tube connector. Here, a condensate drain pipe can be connected.

Compressor unit:

The condensate is routed via hoses to the bulkhead connector labelled ”condensate” in the frame or in the panelling.

Due care must be taken to ensure that any oil which may be drained with the condensate will not pollute the environment. For example, the drain pipe can be directed into a collecting vessel or into drain facilities incorporating oil separators.

For gas compressors delivered with a steel condensate collector tank, the hose with the smaller diameter from the collector will be connected to the condensate outlet. The gas feedback hose (thick) is connected to the male elbow connector used simultaneously for gas intake to the compressor. Either one of the two ports may be used for gas feedback.

10.2.6. Electrical connection

For electrical connection of the automatic condensate drain system refer to the schematic diagrams in the annex, if applicable.

CAUTION

The condensate drain interval is adjusted in the factory to 15 minutes. If the regular operating time of the compressor unit is under 15 minutes, adjust timer K10.2 accordingly to ensure regular draining of the final separator. Otherwise due to shutting off the unit, e.g. every 10 minutes, the timer would be reset each time causing the 15 minute period to be started again. Condensate drain would never be reached which could result in flooding of the separator and damage to the connected systems.

10.2.7. Maintenance

The condensate drain valves for the intermediate separator after 3rd stage and for the oil and water separator are provided with manual drain valves to check correct operation of the automatic system.

The automatic condensate drain system must be serviced as follows:

- Open all manual drain valves (5, Fig. 29) after the other, once a week.
- This must be carried out immediately after the automatic system has drained the condensate. Observe the drainage of condensate when opening the manual drain valves. If the system drains a lot of condensate this is a sign that the system or the corresponding condensate drain valves are not working properly. Find the fault and remedy accordingly.

If hardly any condensate emerges, the automatic system is operating properly. For fault correction, see chapter 19 ”Troubleshooting”.

11. ELECTRICAL SYSTEM

11.1. GENERAL

For description and maintenance schedules for the electric controls and electronic monitors refer to applicable compressor unit instruction manual.

12. COMPRESSOR DRIVE SYSTEM

12.1. GENERAL

The compressor is driven by the drive motor through V-belts.

For description and maintenance schedules, refer to applicable compressor unit instruction manual.

13. COOLING SYSTEM

13.1. GENERAL

The cylinders of the compressor block, the intermediate coolers and the after-cooler are air-cooled.

For this purpose, the compressor is equipped with a fanwheel which draws the cooling air through the fanwheel cover from the surroundings.

The fanwheel is driven by the drive motor V-belt and is also used as the flywheel.

Refer to chapter 15 for proper installation and cooling air supply.

For maximum ambient temperature, see Technical Data, in chapter 1.

14. SAFETY REGULATIONS

14.1. NOTES AND WARNING SIGNS

Notes and warning signs displayed on compressors according to model, application or equipment.

WARNING

Hot surfaces, do not touch!

Danger of burning by touching cylinders, cylinder heads and pressure lines of individual compressor stages.

WARNING

High voltage!

Life threatening danger of electric shock. Maintenance work on electric units or operating equipment may only be carried out by a qualified electrician or by a person instructed and supervised by a qualified electrician according to electrical regulations.

WARNING

Automatic compressor control, unit may start-up without warning!

Before carrying out maintenance and repair work, switch off at the main switch or disconnect from the mains and ensure unit will not restart.

MANDATORY

Instructions must be read by persons operating the machinery!

The instruction manual supplied and all other applicable instructions, regulations etc. must be read and understood by operating personnel before using the machine.

MANDATORY

Hearing protectors must be worn!

Hearing protectors must be worn when working on a machine which is running.

NOTE

Ensure correct direction of rotation!

When switching on the machine, check the arrow to ensure correct direction of rotation of the drive motor.

14.2. IDENTIFYING THE SAFETY NOTICES

Important instructions concerning the endangerment of personnel, technical safety and operating safety will be specially emphasized by placing the following signs before the instructions.

WARNING

This notice is used with maintenance work and operating procedures and must be adhered to exactly in order to avoid endangering personnel.

CAUTION

This notice must be complied with in order to avoid damage to or destruction of the machine or its equipment.

NOTE

This notice advises of technical requirements which the operator must take particular note of.

14.3. FUNDAMENTAL SAFETY NOTICES

14.3.1. Authorized use

- The machine / unit is built according to state of the art technology and established safety technical regulations. Nevertheless, its use can cause danger to life and limb of the operator or third parties or damage to the machine and other equipment.
- Operate the machine / unit only in technically perfect condition in accordance with regulations and safety and danger notices detailed in the instruction manual! In particular, immediately correct faults (or have them corrected) which can impair safety!
- The machine / unit is exclusively for the compression of mediums (air/gas) specified in section A, chapter 1.3. “Technical data”. Any other medium or use outside that specified is not authorized. The manufacturer / supplier is not liable for damage resulting from this. The user alone is responsible for this risk. Authorization for use is also under the condition that the instruction manual is complied with and inspection and maintenance requirements are enforced.

14.3.2. Organizational measures

- Keep the instruction manual to hand near the machine / unit at all times in the relevant holder.
- In addition to the instruction manual, observe and comply with universally valid legal and other obligatory regulations regarding accident prevention and environment protection. See chapter 14.4. This can involve, for example, contact with hazardous substances or the provision / wearing of personal protective equipment.
- In addition to the instruction manual, provide supplementary instructions for supervision and monitoring duties taking into consideration exceptional factors e.g. with regard to organization of work, production, personnel employed.
- Personnel engaged to operate the machine must have read the instruction manual before beginning work, especially the safety notices chapter. When work is already underway it is too late. This is particularly relevant for temporary personnel, e.g. maintenance personnel.

- At the very least, supervise temporary personnel's work in accordance with the instruction manual, taking into account safety and danger factors.
- Personnel may not wear long hair loose, loose clothing or jewellery, including rings. There is a danger of injury through, for example, these getting caught or being pulled into the equipment.
- As far as necessary or according to regulations, use personal protective equipment.
- Observe all safety and danger notices on the machine / unit.
- Keep all safety and danger notices on the machine / unit complete and in readable condition.
- If there are any modifications to the machine / unit or operating conditions which may affect safety, stop the machine / unit immediately and inform the department / person responsible of the fault.
- No modifications may be made to the machine / unit which could impair safety without first obtaining permission from the suppliers. This is also the case with regard to installation and adjustment of safety devices and valves as well as welding of piping and reservoirs.
- Spare parts must always comply with the technical requirements specified by the manufacturer. This is always guaranteed with original spare parts.
- Do not carry out programme changes (software) to the programmable control system.
- Piping must be thoroughly checked (pressure and visual inspection) by the operator at appropriate time intervals, even if no safety related faults have been noticed.
- Intervals stipulated or given in the instruction manual for recurring checks / inspections must be adhered to.
- It is absolutely essential that the workplace is appropriately equipped for maintenance measures.
- Make sure location and operation of fire extinguishers is known.
- Pay attention to fire warning and fire fighting procedures.

14.3.3. Qualifications, fundamental duties

- Work on / with the machine / unit may only be carried out by reliable personnel. Observe the legal minimum age permissible.
- Only employ trained personnel, clearly establish responsibility of personnel for operation, maintenance and repairwork.
- Ensure that only trained personnel work with the machine.
- Establish the responsibilities of the machine operator and establish a procedure for him to inform a third person of unfavourable safety conditions.
- People who are being trained or introduced to the job should only be allowed to work with the machine / unit under constant supervision of an experienced person.
- Work on the electrical equipment of the machine / unit may only be carried out by a qualified electrician or by an instructed person under the direction and supervision of a qualified electrician according to electrotechnical regulations.
- Work on gas equipment may only be carried out by qualified personnel.

14.3.4. Safety notices for operation

- Do not carry out any work if safety is questionable.
- Meet all requirements demanding that the machine / unit is only operated in safe and good working order. Only operate the machine if all protective and safety equipment, e.g. all detachable protective equipment, emergency shut-down devices, soundproofing is provided and in good working order.
- At least once every day, check the machine / unit externally for damage and faults. Inform the department / person responsible immediately if anything is not as is should be (including operation). If necessary, shut the machine down immediately and make it safe.
- If there are any malfunctions, shut the machine / unit down immediately and make it safe. Correct faults immediately (or have them corrected).
- Observe switching on and off processes and monitoring indications according to the instruction manual.
- Before switching on / starting up the machine / unit, ensure that no one can be put at risk through running the machine / unit.
- Carry out the setting, maintenance and inspection processes at the intervals specified in the instruction manual, including replacement of parts / equipment. This work may only be carried out by qualified personnel.
- Before carrying out any exceptional work or repairwork, operating personnel should be informed. Call the supervisor.
- For all work concerning operation, change in production, conversion or regulating of the machine / unit and its safety measures such as inspection, maintenance and repairwork, observe the switching on and off processes in the instruction manual and the notices for maintenance work.
- Clear and make the maintenance area safe as far as necessary.
- If the machine / unit is completely switched off for maintenance and repairwork, ensure that it is protected from unexpected start-up. Turn off main control device and remove the key and / or display a warning sign on the main switch.
- When replacing individual parts and larger assembly groups, they must be carefully fastened to the lifting device so that there is no risk of danger. Use only suitable and technically perfect lifting devices and equipment with sufficient lifting power and strength. Do not linger or work under suspended loads.
- Only entrust an experienced person with the fixing of loads and guiding of crane drivers. The person guiding must remain within sight or in contact with the operator.

- For assembly work above body height, use appropriate safety approved equipment, e.g. ladders and platforms. Do not climb on machine parts. For maintenance work at high levels, wear a safety harness.
- Clean oil, fuel or care products from the machine, in particular the connections and screw joints, before carrying out maintenance / repairwork. Do not use aggressive cleaning fluid. Use a fibre-free cleaning cloth.
- Before cleaning the machine with water or jet of steam (high pressure cleaner) or detergent, cover / seal all openings which for safety and/or operating reasons no water / steam / detergent may penetrate. Electric motor and switch cabinets are particularly at risk.
- When cleaning the operating room, ensure that the temperature sensors of the fire alarm and sprinkler system do not come into contact with hot cleaning fluid, in order to avoid triggering the sprinkler system.
- Completely remove all covers / seals after cleaning.
- After cleaning, check all pressure lines for leaks, loose connections, wear and damage. Immediately eliminate any faults.
- Always retighten any screw connections loosened for maintenance or repairwork.
- If it is necessary to remove safety devices for maintenance and repairwork, these must be replaced and checked immediately after completion of the maintenance or repairwork.
- Ensure safe and environmentally friendly disposal of consumables and old parts.

14.3.5. Particular areas of danger

- Use only original fuses with specified current rating. If there is a failure in the electric energy supply, shut the machine / unit down immediately.
- Work on electric units or operating equipment may only be carried out by a qualified electrician or by a person under the instruction and supervision of a qualified electrician according to electric technical regulations.
- Machines and unit parts which must undergo inspection, maintenance and repairwork, must be disconnected from the mains supply, if specified. Parts which have been disconnected must first be checked for voltage, then earthed and short-circuited and isolated from live neighbouring parts.
- The electrical equipment of a machine / unit must be regularly checked. Defects, such as loose screw connections or burnt wires, must be rectified immediately.
- If work is to be carried out on live parts, work with a second person who can operate the emergency off switch or the main switch in the case of an emergency. Close off the work area with a red and white safety chain and a warning sign. Only use voltage isolated tools.
- Only carry out welding, burning and grinding work on the machine / unit when specifically approved. There can, for example, be a risk of fire or explosion.
- Before carrying out welding, burning or grinding work, clean the machine / unit and surrounding area from dust and flammable material and ensure there is adequate ventilation (danger of explosion!).
- When working in small rooms, observe any national regulations.
- Only personnel with particular knowledge and experience with pneumatics may carry out work on pneumatic equipment.
- Check all pressure lines, hoses and screw connections regularly for leaks and visible damage. Immediately repair any damage. Escaping air or gas under pressure can cause injury and fire.
- Depressurize system and pressure lines before commencing repairwork.
- Pressurized air lines must be laid and mounted by qualified personnel. Connections must not be mixed up. Fittings, length and quality of the piping must correspond to requirements.
- Soundproofing equipment on the machine / unit must be in place and functional during operation.
- The stipulated hearing protectors must be worn.
- With regard to oil, grease and other chemical substances, observe the relevant safety regulations for the product.
- For loading, only use lifting device and equipment with sufficient lifting power and strength.
- Appoint trained guide personnel for lifting operations.
- Machines may only be lifted with a lifting device and by trained personnel according to instructions in the instruction manual (fixing points for fixing equipment etc.).
- Use only suitable transporters with sufficient carrying power.

Secure the load properly. Use suitable fixing points.

- If necessary, provide machine / unit with transportation brackets. Display the appropriate notice. Remove transportation brackets in the correct manner before taking into operation.
- Parts which need to be dismantled for transport purposes must be carefully replaced and secured before taking into operation.
- Even when moving the machine / unit only slightly, the machine / unit must be disconnected from all external energy sources. Before putting into use again, reconnect the machine to the mains according to regulations.
- When taking back into operation, proceed according to the instruction manual.

14.4. SAFETY REGULATIONS (Germany only)

A compressor is identified by German law as being a filling system if pressure cylinders are filled by the system, especially when these cylinders are made available for third parties. The start-up and operation of compressor systems for use as filling stations is governed in Germany by the following regulations:

a- Pressure vessels regulations (DruckbehV) of 27 February 1980, in the present version.

b- Technical regulations for pressure gases (TRG 400, 401, 402, 730).

If a high pressure compressor is used for filling pressure vessels or for the supply of pneumatic systems, the following regulations apply:

c- Accident Prevention Regulations (UVV):

- UVV compressors (VBG 16),

Copies of the above regulations are available through the usual outlets, e.g. in Germany from:

Carl Heymanns Verlag
Luxemburger Str. 449
50939 Köln

Beuth-Vertrieb GmbH
Burggrafenstr. 4 - 7
10787 Berlin

The manufacturer has complied with all applicable regulations and the unit is prepared accordingly. If desired, we offer at our Munich site a TÜV acceptance test according to paragraph 28 (1). Please contact our Technical Service Department with regard to this. They can also supply our leaflet **"IMPORTANT NOTES FOR TÜV CERTIFICATION"**.

According to paragraph 26 of the pressure vessel regulations (DruckbehV), all compressor units which will be used as filling stations must undergo an acceptance test by a professional at their location before bringing them into service. If pressure vessels (bottles) are to be filled by the compressor for a third party then the appropriate permission must be obtained from the responsible authority before the acceptance test. As a rule, this is the factory inspectorate. The procedure for obtaining permission is according to TRG 730, guidelines for permission to set up and operate filling stations. The test certificates and documents delivered with the compressor are important and may be requested during the procedure for obtaining permission. In addition, the documents belonging to the unit are important for recurrent inspections and should therefore be carefully kept.

Inspections in accordance with the regulations for prevention of accidents will be carried out by the manufacturer or by a specialist.

No guarantees whatsoever are valid for damage caused or favoured by the non-consideration of these directions for use.

Excerpts from the above regulations are given below. We strongly recommend that they are observed.

- According to item 10 of the regulations concerning pressure vessels, pressure vessels shall undergo regular inspection:

  (1) Vessels from groups IV and VII[a] shall undergo regular inspection carried out by a qualified inspector at intervals stated in paragraphs 4 and 9.

  (2) Vessels from group 1, which are used for combustible, corrosive or toxic gas, vapours or liquids, as well as vessels from groups II, III and IV shall undergo regular inspection carried out by a qualified inspector on a date set by the operator according to the mode of operation and the medium compressed.

  (3) Regular inspection shall include the inspection of interiors and pressure testing. Interior inspection (according to section 1) shall be carried out by pressure testing, if this cannot be done in its entirety, other equivalent inspection shall be carried out. Pressure inspection (ref. section 1) must be replaced by non-destructive inspection if pressure inspection is not possible due to the construction of the vessel or the mode of operation.

  (4) Interior inspection of pressure vessels from groups IV and VII[a] shall take place every 5 years, pressure inspection every 10 years and exterior inspection every 2 years.
  The supervising authority is authorized in particular cases to:
  1. lengthen inspection intervals, providing safety is guaranteed
  2. shorten inspection intervals, if this is necessary to protect employees or other persons.

  (5) If inspection intervals for pressure vessels are included in traffic regulations concerning internal transport, these supersede intervals stated in paragraph 4 section 1.

  (6) Interior and pressure inspection intervals commence after the first inspection on reception and following relocation after the new reception inspection.
  Inspections must be carried out, at the latest, 6 months after the renewal date. Contrary to section 1, the intervals begin:
  1. after the construction inspection, if this took place 2 years before the first reception inspection
  2. after the last interior examination, if this took place 2 years before the new reception inspection.

  (7) The inspection interval is considered completed if the inspection takes place during the calendar year in which it is due.

  (8) If the pressure vessel is not in use on the day of inspection, the inspection due should be carried out before it is used again.

  (9) If an additional inspection is carried out, the interval for the following inspection begins after the additional inspection, as long as the additional inspection corresponds with the scheduled inspection.

  (10) Pressure vessels from groups IV or VII shall only be used again, after the inspection is due, if the inspection has already taken place within the stated period and if the authorized inspector has certified the vessel satisfactory according to inspection guidelines.

  (11) If the authorized inspector has not declared the pressure vessel to be in perfect condition, the supervising authority shall decide on the outcome.

  (12) §9, para. 9 will be applied accordingly.

- **Regulations governing the handling of pressure vessels (DruckbehV). Paragraph 15 of these regulations requires that a mobile pressurized tank - in this case a compressed air cylinder - shall only be filled with gas or air under pressure if:**

a) BAUER compressor units include pressure vessels from test groups II, III and IV, only.

a) the cylinder is identified with the mark and date of inspectorate approval together with the inspection interval;

b) the inspection interval has not expired[a] ;

c) the cylinder or tank in question exhibits no defects which could result in a hazard to those concerned or third parties (e.g. faulty valve).

Only compressed air cylinders shall be filled with the system – never oxygen cylinders. The connecting screw thread (DIN 477) shall be designed to make direct connection of oxygen cylinders impossible. The use of adapters is prohibited.

- **TRG 402, operating filling systems**

2. Personnel and personnel instruction

2.1 Filling systems shall only be operated and maintained by persons who:

1. are more than 18 years of age
2. are competent and trained in the use of the system
3. can be expected to do their job satisfactorily.

2.2 Supervised operations can also be executed by persons who do not fulfil requirements stated in 2.1. items 1 and 2.

2.3 Prior to starting their job and periodically in reasonable intervals, however at least once a year, operating personnel are to be instructed regarding the following subjects:

1. the particular hazards involved in handling compressed gases
2. safety regulations, especially those of the TRG
3. what to do in case of fault, damage and accident
4. how to use fire extinguishers and other safety equipment
5. operation and maintenance of the filling systems according to the instruction manual [b]

2.4 A written record shall be kept with regard to the instructions of 2.3 requiring the signature of the employee as acknowledgement of instruction.

2.5 Items 2.3 and 2.4 also apply to persons who are only temporarily involved.

3. Operation

3.1 An operating manual[b] in plain, understandable language must be provided for each and every filling system and must detail procedures to ensure correct operation and to avoid hazards and accidents.
Copies of these instructions and translations thereof must be available to the operating and maintenance personnel at all times.

3.2 High risk work (in conjunction with the maintenance of such systems) which cannot be carried out according to item 3.1 in the instruction manual must only be carried out according to separate, written instructions by the contractor or his representative in which the responsibilty for supervision activities is clearly stated[c] .

3.6 If pressurized gases can be isolated in sections of a filling system which can be closed so that the pressure can become hazardous under the effects of heat, measures must be taken to ensure that the pressure is relieved immediately after isolating the section, unless means are already provided for eliminating the occurrence of a hazardous pressure[d] .

3.7 Empty cylinders or tanks must be filled as quickly as possible and filled cylinders or tanks shall be removed from the premises as quickly as possible (see TRG 401 item 3.2, sentence 2, No. 2). Empty or filled cylinders and tanks shall not be placed where they obstruct an escape route, it is therefore prohibited to place tanks or cylinders in passageways and stairways of any kind.

5. Filling procedure

5.1 A pressurized gas tank or cylinder shall be filled only with the pressurized gas as identified on the tank or cylinder and only to the amount stated on the tank resulting from the corresponding pressure, weight or volume (see para. 15, section 2, DruckbehV).

6. Procedure after filling

6.3 Defects on filled tanks

Should a filled pressurized gas cylinder or tank prove to leak on inspection in a way which does not permit immediate remedy or should the filled cylinder or tank exhibit a defect of any kind which could result in a hazard to the handling personnel or third parties, said cylinders or tanks shall be immediately rendered harmless by emptying (see para. 21, section 1, DruckbehV).

9. Testing and servicing filling systems

9.1 Testing filling system leakage

9.1.1 Filling systems and selection of such systems shall only be put into operation for the first time after a major modification or after repair when they have been checked for leakage by an authorized technician or on order of the contractor by an inspector. Testing by the technician shall only be carried out under supervision of the contractor or his representative.

9.1.2 For the purpose of testing, a pressurized gas shall be used which is available in gaseous form under the condition of testing[e] .

9.1.3 The pressure shall be elevated gradually in increments until the highest operating pressure of the system is attained.

9.1.4 Testing shall be documented and the documents duly held in a safe place. The documentation shall identify:

1. date of testing
2. persons responsible for supervision
3. persons responsible for inspection
4. description of the system or subsystem being tested
5. test gas
6. description of the method of testing
7. any defect noted and how these defects were remedied.

a) For diving bottles (labelled Druckluft-TG or Preßluft-TG) the inspection intervals are governed by TRG 102, enclosure 1, group 1.1. According to this, the inspection interval is 2 years. For breathing apparatus (labelled Druckluft-AG or Preßluft-AG) the inspection interval is 6 years.

b) See this instruction manual.

c) Notices for maintenance and repair work can be found in section D of this instruction manual.

d) Does not apply to the compressor itself but to the pressure vessels filled.

e) For compressor units use only compressed air which has been compressed by the compressor itself.

9.2 Testing flexible piping

9.2.1 Flexible piping (i.e. hose pipes and articulated pipes)[a] must be tested prior to first time operation and at least once a year according to actual requirements to ensure satisfactory condition (i.e. no wear and tear or leakage).
This shall be carried out by the manufacturer or the persons responsible for the filling operation.

9.2.2 Testing as per item 9.2.1 shall include the following individual tests:

1. visual inspection inside and outside to the extent possible to ascertain general conditions.
2. pressure testing to 1.5 times the highest service pressure.

9.2.3 Pressure testing hoses shall be carried out with water[b] . The test pressure shall be maintained for at least 10 minutes. Hoses shall be first tested when extended and then when rolled up (drum diameter approx. 30 times hose diameter).

9.2.4 The results of testing shall be certified by the manufacturer prior to first time operation and later testing shall be documented by the filling inspector. These certificates shall be filed in a safe place. The certificate shall identify:

1. date of testing
2. persons responsible for testing
3. nature and identification of the pipe tested
4. test medium
5. description of test method
6. any defects established and how they were remedied.

In addition, the manufacturer's test certificate shall identify the material and rated pressure. The certificate relating to the hose pipes shall state that the hose is suitable for the pressurized gas.

9.3 Maintenance

9.3.1 Infrequently used closing devices shall be checked at suitable intervals.

9.3.2 Parts coming into contact with oxidizing pressurized gases shall be inspected for signs of oil and grease in suitable intervals and cleaned as required.

10. Shutting down the system, reporting accidents and damage.

10.1 Should a filling system not be in proper condition, thus constituting a hazard for operating personnel or third parties, the system shall be shut down immediately (see para. 30, section 3, DruckbehV).

10.2 Any person operating a filling system is obliged to report any accident to do with the operation of the system in which a person has been killed or health damaged and shall file the details with the supervising authorities and the responsible accident insurer without delay (see para. 34., DruckbehV).

10.3 Item 10.2 also applies when a pressurized gas container having a capacity in excess of 1 litre (1.05 quarts) is split open or explodes inside or outside the filling system (see para. 34, DruckbehV).

a) On breathing air units: filling hoses.

b) Filling hoses must be thoroughly dried inside and out after pressure testing.

15. INSTALLATION, OPERATION

15.1. INSTALLATION

For pneumatic connections, dimensions and weight refer to compressor block drawing in the annex.

For operating procedures refer to applicable compressor unit instruction manual.

16. MAINTENANCE SCHEDULE

16.1. MAINTENANCE INTERVALS

Interval	Maintenance Work	Chap.
Daily before taking unit into operation	Check oil level	2.
1/2 hour after start-up	Manual check of valve function	9.
Weekly or as required	Check automatic condensate drain; open manual condensate drain taps	10.
250 operating hours	Check oil pump drive belt Service micronic intake filter Check safety valves Check all connections for leakage	2. 3. 7. --
1,000 operating hours	Dismantle valves, clean, check, and replace if necessary Mineral oil change Clean sintered metal filter element(s)	9. 2. 4./5.
2,000 operating hours	Synthetic oil change Replace valves	2. 9.
3,000 operating hours or as required	Check pistons and piston rings	18.
Annually	Mineral oil change, if run for less than 1,000 operating hours Check opening pressure of safety valves	2. 7.
Biannually	Synthetic oil change, if run for less than 2,000 operating hours	2.

16.2. MAINTENANCE RECORD

We recommend that all maintenance work is recorded in a service book, showing the date and details of the work carried out. This will help to avoid expensive repairwork caused by missed maintenance work.

If it is necessary to claim against the warranty, it will help to have proof that regular maintenance work has been carried out and that the damage has not been caused by insufficient maintenance. Please refer to section 23 of our general terms and conditions.

For this purpose, the following maintenance control sheet is provided (copy as required). The grey boxes indicate when the maintenance work is due. Please mark the appropriate box(es) to show what maintenance work has been carried out and the number of hours of service, then sign and date.

Operating hours ➧ Work to be carried out ➧	250	500	750	1000	1250	1500	1750	2000	2250	2500	2750	3000	Annually	Bi-annually	Date Signature ➧
Check oil pump drive V-belt															
Service micronic intake filter															
Check safety valves															
Check connections for leakage															
Dismantle valves, clean and check															
Oil change; mineral oil															
Clean sintered metal filter elements															
Oil change; synthetic oil															
Replace valves															
Check opening pressure of safety valves															
Check pistons and piston rings															

17. STORAGE, PRESERVATION

17.1. GENERAL

If the compressor is put out of service for more than six months, the unit should be preserved in accordance with the following instructions:

Make sure the compressor is kept indoors in a dry, dust free room. Only cover the compressor with plastic, if it is certain that no condensation will form under the sheet. Nevertheless, the sheet should be removed from time to time and the unit cleaned on the outside. If this procedure cannot be followed and/or the compressor is going to be taken out of service for more than 2 years, please contact our Technical Service Department for special instructions.

17.2. PREPARATION

Before preserving the compressor unit, run it warm and when it reaches the specified service pressure, keep it running for approx. 10 minutes.

Then carry out the following:

- Check all pipes, filters and valves (also safety valves) for leakage.
- Tighten all couplings, as required.
- After 10 minutes, open the filling valves or the outlet valve and run the compressor at the set minimum pressure (pressure maintaining valve, see chapter 6) for approx. 5 minutes.
- After these 5 minutes, shut the system down. Drain condensate from separators. Depressurize unit. Shut filling valves/ outlet valve.
- Open filters and grease threads.

On units equipped with a filter system please observe the following:

- **Ensure that filter cartridges remain in filters!**
  This will prevent oil entering filling lines as a result of preservation procedures.
- Remove intake filter from manifold and all intake lines from valve heads.
- Let compressor unit cool down.

17.3. PRESERVING THE COMPRESSOR

- Turn the compressor on and spray a small amount (approx. 10 ccm/0.6 cu. in.) of **compressor oil N19745** (refer to chapter 2) into the valve head inlet port (compressors with dual 1st stage: **each** of the inlet ports) while the compressor is running. Do not let the compressor warm up too much, to keep oil sticky.
- Shut compressor unit off.
- Close all valves.
- Place the dust cap onto the inlet port.

17.4. PRESERVING THE MOTOR/ENGINE

Preserve the motor/engine according to the instructions of the motor/engine manufacturer.

17.5. PREVENTIVE MAINTENANCE DURING STORAGE

Run the compressor **once every 6 months** as described in the following:

- Remove the dust cap from the inlet port and insert the intake filter.
- Open the filling valves or the outlet valve and let the unit run for approx. 10 minutes or until the pressure gauges indicate the correct values.
- Stop the compressor.
- Open condensate drain valves and release compressed air. Close condensate drain valves again.
- Carry out preservation procedure according to para.17.3.

17.5.1. Changing the lube oil for preserving

- After prolonged storage, the oil will age in the compressor and engine. It should be drained after **2 years** at the latest and replaced with fresh oil.
- The stated period can only be attained when the crankcase is sealed during the preservation period in accordance with the preservation requirements.
- After changing the oil, turn the compressor and the engine or run them for the required period. See paras. 17.3. and 17.4.
- Check the lubrication of the compressor when putting the unit into operation once every six months or when turning the compressor.
  The oil pump is functioning properly when oil can be seen flowing through the sight glass of the oil pressure regulator (up to K180 compressor block, only) and if the oil pressure gauge indicates the prescribed pressure.

17.6. REACTIVATING THE COMPRESSOR UNIT

- Remove the dust cap from the inlet port and insert the intake filter.
- Check the oil level of the compressor.
- Check the motor/engine according to the manufacturer's instructions.
- Only applicable for units equipped with a filter system: open the purifier and change all filter cartridges.
- Run the compressor warm with open filling valves or outlet valve for approx. 10 minutes.
- Check the oil pressure on the pressure gauge. If there is any fault, check the lubrication of the compressor.
- After 10 minutes, close the filling valves or the outlet valve and run the unit up to final pressure until the final pressure safety valve blows. To do so, override the pressure switch, if installed on the unit.
- Check the inter-pressure safety valves for leakage.
- Establish cause of any fault from the trouble-shooting table, section 19, and remedy.
- Stop the system when running properly, the compressor is then ready for operation.

18. REPAIR INSTRUCTIONS

18.1. GENERAL

Preventive maintenance usually involves replacing the valves, gaskets and sealing rings as well as carry-ing out the maintenance work.

Repair work can be carried out on the compressor block to a certain extent but a certain experience and skill is necessary. It should be noted, however, that

- no repair should be carried out on the crankdrive nor on the bearings
- safety valves are not repaired but always replaced completely.

NOTE

For all further repair instructions refer to applicable workshop manual.

19. TROUBLE-SHOOTING

Trouble	Cause	Remedy
No oil pressure	Air trapped in oil pump	Vent pump and line see chapter 2.
	Oil pump drive not correct	Check drive - see workshop manual
Sight glass exhibits air bubbles	Oil pressure regulator dirty	Clean valve and readjust oil pressure regulator
Oil foam in the crankcase	Last stage piston worn	Operate compressor with final stage valve head removed. If oil flows continuously out of cylinder, replace piston and liner
	Last stage outlet valve defective	Replace
Compressor does not attain final pressure	Condensate drain valve(s) and/or fittings leaking	Tighten and reseal
	Premature opening of final safety valve	Clean final safety valve and readjust
	Piston rings worn	Replace
	Excessive piston clearance	Replace
Compressor output insufficient	Pipes leaking	Re-tighten
	Intake filter clogged	Replace filter element
Safety valves between individual stages releasing pressure	Intermediate pressure too high	Check valves - see 9.2. - service and clean valves
	Valves not closing properly	
Compressor running too hot	Insufficient supply of fresh cooling air	Check location max. ambient temperature + 45 °C (110 °F)
	Intake or outlet valves not closing properly	Check and clean valves, replace as necessary
	Wrong direction of rotation	See arrow on compressor and remedy accordingly
Oil residue in delivered air	Improper maintenance of filters, filter cartridge saturated	Remedy filters, change filter cartridges
	Wrong oil type	Use right oil type (see chap. 2) and clean sooted valves
Automatic Condensate Drain (optional)		
Drain valves do not close	No control air	Check control air line
	Drain valves leaking	Dismantle drain valve and clean
Drain valves do not open	Condensate drain valve piston jammed	Dismantle drain valve, clean or replace valve
Solenoid valve does not close	Solenoid valve faulty	Check solenoid valve and replace if necessary
	No electrical signal	Check for voltage from timer
Solenoid valve does not open	Solenoid valve faulty	Check solenoid valve and replace if necessary
	Continuous electrical signal	Check electrical control circuit and timer
Unsatisfactory drainage (lot of condensate from manual valves)	Nozzles in 3rd and 4th stage drain valves clogged	Remove nozzles, clean Note: 3rd stage 2mm ∅ 4th stage 0.8mm ∅

20. TABLES

20.1. TIGHTENING TORQUE VALUES

NOTE

Unless otherwise specified in text, the following torque values apply. All valve head screws require torque wrench tightening! The indicated torque values are valid for bolts in greased condition. Replace self-retaining nuts on reassembly.

Bolt or screw	Thread	Max. torque
Hex and allen head	M 6	10 Nm (7 ft.lbs)
Hex and allen head	M 8	25 Nm (18 ft.lbs)
Hex and allen head	M 10	45 Nm (32 ft.lbs)
Hex and allen head	M 12	75 Nm (53 ft.lbs)
Hex and allen head	M 14	120 Nm (85 ft.lbs)
Hex and allen head	M 16	200 Nm (141 ft.lbs)
Pipe connections (swivel nuts):		Finger-tight + 1/2 turn

20.2. TORQUE SEQUENCE

Tighten valve head and cylinder bolts/nuts equally in the sequence shown in Fig. 32.

Be sure to tighten all parts in **cold** condition only.

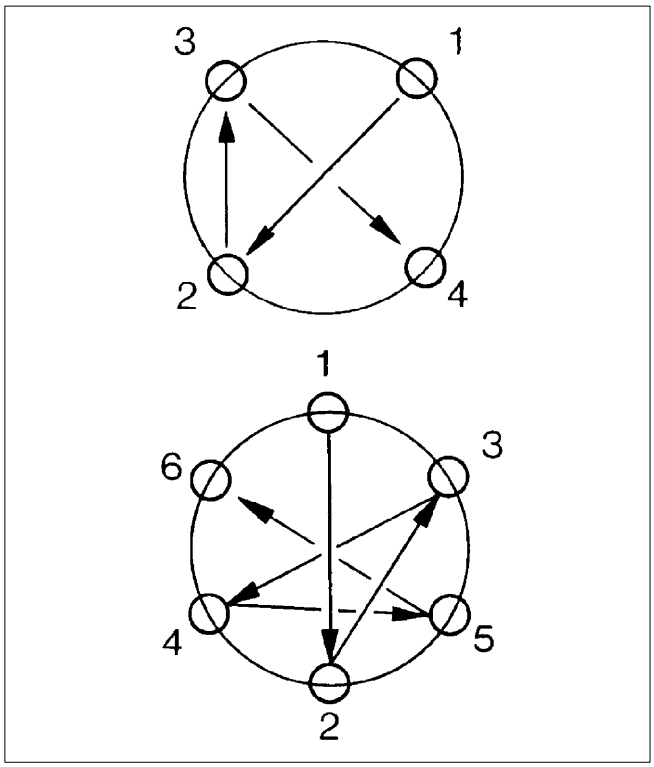

Fig. 32 Torque sequence

I100hor./03/96

20.3. LUBRICATION CHART

Usage	Lubricants
Rubber and plastic parts, filter housing threads	WEICON WP 300 WHITE part no. N19752 or White petrolatum DAB9 part no. N19091
Sealing rings	Klüber Microlube GL261
Shaft seal (seal) Shaft seal (shaft)	Klüber Microlube GL261 Klüber SK 01-205
Screws, bolts, threads	WEICON ANTI-SEIZE AS 040 P part no. N19753 or equivalent compound with copper or MoS_2 additives

For all lubricating oils refer to chapter 2 or lubricating oil list available through **BAUER** Service Department.

20.4. ADHESIVE AND SEALANT CHART

Usage	Adhesives and Sealants
Screws	Loctite 2701
Seals for conical threads	Loctite 511
Metal - metal seals High temperature connections, e.g. valve heads, cylinders	Temperature resistant compound, e.g. WACKER E10, part no. N18247
Paper gaskets	Loctite FAG 2

20.5. TESTING AGENTS

Usage	Testing agents
Tube connectors, tubes	Leakage test spray, part no. FM0089

20.6. CONVERSION TABLE bar - psi

bar	psi	bar	psi	bar	psi	bar	psi	bar	psi
1	15	56	812	111	1,610	166	2,407	230	3,335
2	29	57	827	112	1,624	167	2,422	235	3,408
3	44	58	841	113	1,639	168	2,436	240	3,480
4	58	59	856	114	1,653	169	2,451	245	3,553
5	73	60	870	115	1,668	170	2,465	250	3,625
6	87	61	885	116	1,682	171	2,480	255	3,698
7	102	62	899	117	1,697	172	2,494	260	3,770
8	116	63	914	118	1,711	173	2,509	265	3,843
9	131	64	928	119	1,726	174	2,523	270	3,915
10	145	65	943	120	1,740	175	2,538	275	3,988
11	160	66	957	121	1,755	176	2,552	280	4,060
12	174	67	972	122	1,769	177	2,567	285	4,133
13	189	68	986	123	1,784	178	2,581	290	4,205
14	203	69	1,001	124	1,798	179	2,596	295	4,278
15	218	70	1,015	125	1,813	180	2,610	300	4,350
16	232	71	1,030	126	1,827	181	2,625	305	4,423
17	247	72	1,044	127	1,842	182	2,639	310	4,495
18	261	73	1,059	128	1,856	183	2,654	315	4,568
19	276	74	1,073	129	1,871	184	2,668	320	4,640
20	290	75	1,088	130	1,885	185	2,683	325	4,713
21	305	76	1,102	131	1,900	186	2,697	330	4,785
22	319	77	1,117	132	1,914	187	2,712	335	4,858
23	334	78	1,131	133	1,929	188	2,726	340	4,930
24	348	79	1,146	134	1,943	189	2,741	345	5,003
25	363	80	1,160	135	1,958	190	2,755	350	5,075
26	377	81	1,175	136	1,972	191	2,770	355	5,148
27	392	82	1,189	137	1,987	192	2,784	360	5,220
28	406	83	1,204	138	2,001	193	2,799	365	5,293
29	421	84	1,218	139	2,016	194	2,813	370	5,365
30	435	85	1,233	140	2,030	195	2,828	375	5,438
31	450	86	1,247	141	2,045	196	2,842	380	5,510
32	464	87	1,262	142	2,059	197	2,857	385	5,583
33	479	88	1,276	143	2,074	198	2,871	390	5,655
34	493	89	1,291	144	2,088	199	2,886	395	5,728
35	508	90	1,305	145	2,103	200	2,900	400	5,800
36	522	91	1,320	146	2,117	201	2,915	405	5,873
37	537	92	1,334	147	2,132	202	2,929	410	5,945
38	551	93	1,349	148	2,146	203	2,944	415	6,018
39	566	94	1,363	149	2,161	204	2,958	420	6,090
40	580	95	1,378	150	2,175	205	2,973	425	6,163
41	595	96	1,392	151	2,190	206	2,987	430	6,235
42	609	97	1,407	152	2,204	207	3,002	435	6,308
43	624	98	1,421	153	2,219	208	3,016	440	6,380
44	638	99	1,436	154	2,233	209	3,031	445	6,453
45	653	100	1,450	155	2,248	210	3,045	450	6,525
46	667	101	1,465	156	2,262	211	3,060	455	6,598
47	682	102	1,479	157	2,277	212	3,074	460	6,670
48	696	103	1,494	158	2,291	213	3,089	465	6,743
49	711	104	1,508	159	2,306	214	3,103	470	6,815
50	725	105	1,523	160	2,320	215	3,118	475	6,888
51	740	106	1,537	161	2,335	216	3,132	480	6,960
52	754	107	1,552	162	2,349	217	3,147	485	7,033
53	769	108	1,566	163	2,364	218	3,161	490	7,105
54	783	109	1,581	164	2,378	220	3,190	495	7,178
55	798	110	1,595	165	2,393	225	3,263	500	7,250

20.7. CONVERSION TABLE psi – bar

psi	bar	psi	bar	psi	bar	psi	bar	psi	bar
1	0.07	61	4.21	310	21.38	910	63	3,400	234
2	0.14	62	4.28	320	22.07	920	63	3,500	241
3	0.21	63	4.34	330	22.76	930	64	3,600	248
4	0.28	64	4.41	340	23.45	940	65	3,700	255
5	0.34	65	4.48	350	24.14	950	66	3,800	262
6	0.41	66	4.55	360	24.83	960	66	3,900	269
7	0.48	67	4.62	370	25.52	970	67	4,000	276
8	0.55	68	4.69	380	26.21	980	68	4,100	283
9	0.62	69	4.76	390	26.90	990	68	4,200	290
10	0.69	70	4.83	400	27.59	1,000	69	4,300	297
11	0.76	71	4.90	410	28.28	1,010	70	4,400	303
12	0.83	72	4.97	420	28.97	1,020	70	4,500	310
13	0.90	73	5.03	430	29.66	1,030	71	4,600	317
14	0.97	74	5.10	440	30.34	1,040	72	4,700	324
15	1.03	75	5.17	450	31.03	1,050	72	4,800	331
16	1.10	76	5.24	460	31.72	1,060	73	4.,900	338
17	1.17	77	5.31	470	32.41	1,070	74	5,000	345
18	1.24	78	5.38	480	33.10	1,080	74	5,100	352
19	1.31	79	5.45	490	33.79	1,090	75	5,200	359
20	1.38	80	5.52	500	34.48	1,100	76	5,300	366
21	1.45	81	5.59	510	35.17	1,110	77	5,400	372
22	1.52	82	5.66	520	35.86	1,120	77	5,500	379
23	1.59	83	5.72	530	36.55	1,130	78	5,600	386
24	1.66	84	5.79	540	37.24	1,140	79	5,700	393
25	1.72	85	5.86	550	37.93	1,150	79	5,800	400
26	1.79	86	5.93	560	38.62	1,160	80	5,900	407
27	1.86	87	6.00	570	39.31	1,170	81	6,000	414
28	1.93	88	6.07	580	40.00	1,180	81	6,100	421
29	2.00	89	6.14	590	40.69	1,190	82	6,200	428
30	2.07	90	6.21	600	41.38	1,200	83	6,300	434
31	2.14	91	6.28	610	42.07	1,210	83	6,400	441
32	2.21	92	6.34	620	42.76	1,220	84	6,500	448
33	2.28	93	6.41	630	43.45	1,230	85	6,600	455
34	2.34	94	6.48	640	44.14	1,240	86	6,700	462
35	2.41	95	6.55	650	44.83	1,250	86	6,800	469
36	2.48	96	6.62	660	45.52	1,260	87	6,900	476
37	2.55	97	6.69	670	46.21	1,270	88	7,000	483
38	2.62	98	6.76	680	46.90	1,280	88	7,100	490
39	2.69	99	6.83	690	47.59	1,290	89	7,200	497
40	2.76	100	6.90	700	48.28	1,300	90	7,300	503
41	2.83	110	7.59	710	48.97	1,400	97	7,400	510
42	2.90	120	8.28	720	49.66	1,500	103	7,500	517
43	2.97	130	8.97	730	50.34	1,600	110	7,600	524
44	3.03	140	9.66	740	51.03	1,700	117	7,700	531
45	3.10	150	10.34	750	51.72	1,800	124	7,800	538
46	3.17	160	11.03	760	52	1900	131	7,900	545
47	3.24	170	11.72	770	53	2,.000	138	8,000	552
48	3.31	180	12.41	780	54	2,100	145	8,100	559
49	3.38	190	13.10	790	54	2,200	152	8,200	566
50	3.45	200	13.79	800	55	2,300	159	8,300	572
51	3.52	210	14.48	810	56	2,400	166	8,400	579
52	3.59	220	15.17	820	57	2,500	172	8500	586
53	3.66	230	15.86	830	57	2,600	179	8,600	593
54	3.72	240	16.55	840	58	2,700	186	8,700	600
55	3.79	250	17.24	850	59	2,800	193	8,800	607
56	3.86	260	17.93	860	59	2,900	200	8,900	614
57	3.93	270	18.62	870	60	3,000	207	9,000	621
58	4.00	280	19.31	880	61	3,100	214	9,100	628
59	4.07	290	20.00	890	61	3,200	221	9,200	634
60	4.14	300	20.69	900	62	3,300	228	9,300	641

20.8. TEMPERATURE CONVERSION TABLE

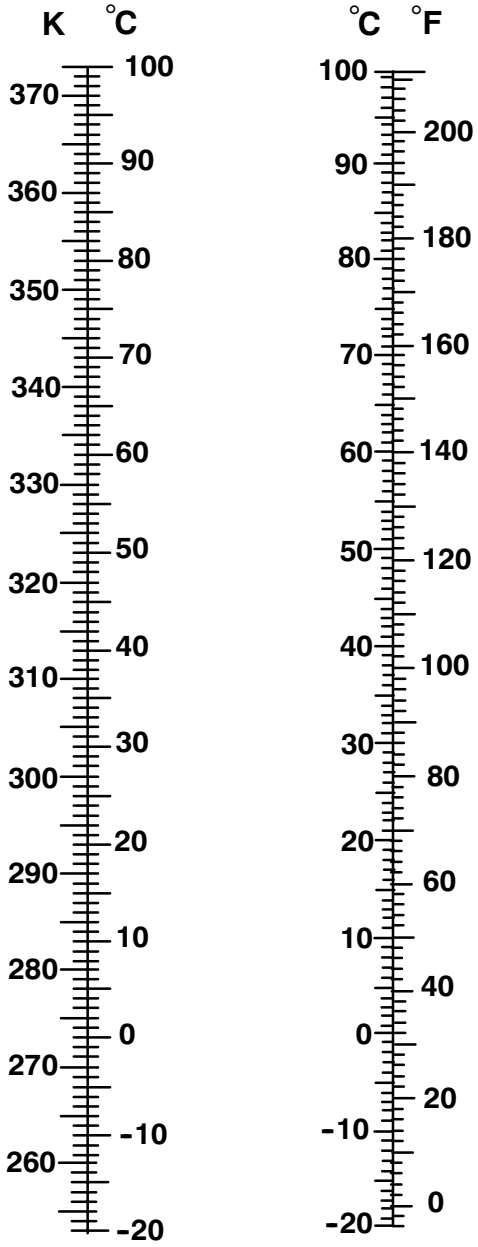

20.9. MISCELLANEOUS CONVERSION TABLES

Linear measures

	cm	m	km	in	ft	mile
cm	1	0.01	1×10^{-5}	0.3937	0.03281	6.21×10^{-6}
m	100	1	0.001	39.37	3.281	6.21×10^{-4}
km	1×10^{5}	1000	1	3.94×10^{4}	3281	0.6214
in	2.540	0.02540	2.54×10^{-5}	1	0.08333	1.58×10^{-5}
ft	30.48	0.3048	3.05×10^{-4}	12	1	1.89×10^{-4}
mile	1.61×10^{5}	1.609	1.609	6.34×10^{4}	5280	1

Volume measures

	cm^3	litre	m^3	in^3	ft^3	gal
cm^3	1	0.001	1×10^{-6}	0.06102	3.53×10^{-5}	2.64×10^{-4}
litre	1000	1	0.001	61.02	0.03532	0.2642
m^3	1×10^{6}	1000	1	6.10×10^{4}	35.31	264.2
in^3	16.39	0.01639	1.64×10^{-5}	1	5.79×10^{-4}	0.00433
ft^3	2.83×10^{4}	28.32	0.02832	1728	1	7.481
gal	3785	3.785	0.00379	231.0	0.1337	1

Flow rates

	l/sec	gal/min	ft^3/sec	ft^3/min	l/min
l/sec	1	15.85	0.03532	2.119	60
gal/min	0.06309	1	0.00223	0.1337	3.785
ft^3/s	28.32	448.8	1	60	1699.2
ft^3/min	0.4719	7.481	0.01667	1	28.32
l/min	0.0167	0.2642	0.0005885	0.03532	1

Pressure conversion table

	mm Hg	inch Hg	inch H_2O	ft H_2O	atm	psi	kg/cm^2	bar	kPa
mm Hg	1	0.03937	0.5353	0.04460	0.00132	0.01934	0.00136	0.00133	0.133
inch Hg	25.40	1	13.60	1.133	0.03343	0.4912	0.03453	0.0340	3.395
inch H_2O	1.868	0.07355	1	0.08333	0.00246	0.03613	0.00254	0.0025	0.249
ft H_2O	22.42	0.8826	12	1	0.02950	0.4335	0.03048	0.0300	2.984
atm	760	29.92	406.8	33.90	1	14.70	1.033	1.013	101.375
lb/in^2	51.71	2.036	27.67	2.307	0.06805	1	0.07031	0.069	6.895
kg/cm^2	735.6	28.96	393.7	32.81	0.9678	14.22	1	0.981	98.066
bar	751.8	29.41	402.164	33.3	0.9870	14.50	1.02	1	100
kPa	7.525	0.2960	4.021	0.3350	0.0098	0.1450	0.01	0.01	1

NOTES

21. ANNEX

- **Schematic diagrams, standard**
  Air flow diagrams, standard
  Drawings
  Parts lists, standard

  or, depending on order

- **Special documentation**
  Schematic diagrams
  Air flow diagrams
  Illustrations
  Parts lists

  This special documentation supersedes and/or supplements the respective paragraphs/figures of the Instruction Manual

Ersatzteilliste	**A2.8**	**Kompressorblock**	**K14, IK140, IK14.11**
Spare parts catalogue	**A2.8**	**Compressor block**	**K14, IK140, IK14.11**
Liste de pièces	**A2.8**	**Bloc compresseur**	**K14, IK140, IK14.11**

BAUER KOMPRESSOREN

Baugruppe	Assembly	Groupe d'assemblage	Seite/page
076482 Kurbelgehäuse	Crankcase	Carter	A2.8- 1
063544 Triebwerk	Driving gear	Embiellage	A2.8- 2
063361 Zylinder 1. Stufe	Cylinder 1st stage	Cylindre 1e étage	A2.8- 3
058303 Zylinder 2. Stufe	Cylinder 2nd stage	Cylindre 2e étage	A2.8- 4
058304 Zylinder 3. Stufe	Cylinder 3rd stage	Cylindre 3e étage	A2.8- 5
063550 Zylinder 4. Stufe, K14	Cylinder 4th stage, K14	Cylindre 4e étage, K14	A2.8- 6
068215 Zylinder 4. Stufe, K14.11	Cylinder 4th stage, K14.11	Cylindre 4e étage, K14.11	A2.8- 7
069790 Ventilkopf 1. Stufe	Valve head 1st stage	Culasse 1e étage	A2.8- 8
069791 Ventilkopf 2. Stufe	Valve head 2nd stage	Culasse 2e étage	A2.8- 9
069792 Ventilkopf 3. Stufe	Valve head 3rd stage	Culasse 3e étage	A2.8- 10
069793 Ventilkopf 4. Stufe, K14	Valve head 3rd stage, K14	Culasse 3e étage, K14	A2.8- 11
072198 Ventilkopf 4. Stufe, K14.11	Valve head 4th stage, K14.11	Culasse 4e étage, K14.11	A2.8- 12
014879 Schwungrad kpl.	Flywheel assy	Volant cpl.	A2.8- 13
013758 Ansaugfilter kpl.	Intake filter assy.	Filtre d'aspiration cpl.	A2.8- 14
064632 Zwischenfilter	Intermediate separator.	Séparateur intermédiaire	A2.8- 15
067612 Zwischenfilter, K14	Intermediate separator, K14.	Séparateur intermédiaire, K14	A2.8- 16
068260 Zwischenfilter, K14.11	Intermediate separator, K14.11.	Séparateur intermédiaire, K14.11	A2.8- 17
011430 Kondensatablaßhahn	Condensate drain tap	Robinet de purge	A2.8- 18
069795 Kühlung, K14	Cooling assy, K14.	Refroidissement, K14	A2.8- 19
068235 Kühlung, K14.11	Cooling assy, K14.11.	Refroidissement, K14.11	A2.8- 20
064357 Zwischenkühler	Inter-cooler	Refroidisseur intermédiaire	A2.8- 21
064359 Zwischenkühler	Inter-cooler	Refroidisseur intermédiaire	A2.8- 22
064359 Zwischenkühler	Inter-cooler	Refroidisseur intermédiaire	A2.8- 23
058309 Druckölschmierung, K14	Lubrication system, K14	Lubrification, K14	A2.8- 24
068237 Druckölschm., K14.11	Lubrication system, K14.11	Lubrification, K14.11	A2.8- 25

Änder.-Nr. Change no. No. de change	Datum Date	Änderung	Change	Changement
0	01.09.1997	Grundausgabe, Fertigungsst. 8	Basic edition mod. 8	Edition de base mod. 8
1	14.11.1997	Ä-M. 6127	Chng.no. 6127	no. de change 6127

Bitte beachten Sie auch unsere regelmäßigen Neuauflagen im Internet unter:

www.bauer-kompressoren.de

For regular updates please visit us in the internet at:

www.bauer-kompressoren.de

Pour les éditions nouvelles se conferer à l'internet sous:

www.bauer-kompressoren.de

BAUER KOMPRESSOREN

Wichtige Hinweise für Teilebestellung:

Bestell-Nr., die mit der Ziffer 0 beginnen, bezeichnen Baugruppen, die komplett geliefert werden.Teile ohne Bestell-Nr. sind nur zur Information für die Montage aufgeführt. Sie sind nicht als Ersatzteil erhältlich. Bei Ersatzteilbestellungen erwarten Sie unsere richtige Lieferung; deshalb benötigen wir von Ihnen folgende Angaben (siehe unten gezeigtes Typenschild):

1. Modellbezeichnung, Fabrik-Nr. sowie Fertigungsstand von Anlage/Block
2. Stückzahlen
3. Benennung und Best.-Nr. des gewünschten Teils

Bestell-Beispiel:

Für Kompressorblock ...
Fabrik-Nr. 524-0528/1/2 drei Dichtungen 8263-090

Important notes for spare parts orders:

Part nos. beginning with digit 0 indicate parts available as complete assemblies. Parts without part no. are indicated for assembly reference, only. These parts are not available as single parts.When placing an order for spare parts, please give the following items so as to ensure our correct delivery (see indentification plate shown below):

1. Model, serial no. as well as design standard of unit/block
2. Quantity required
3. Name and part no.

Example for order:

For compressor block ...
serial no. 524-0528/1/2, three gaskets 8263-090

Avis important pour la commande de pièces:

Les nos. de commande commençant par le chiffre 0 indiquent les pièces livrées au complet. Les pièces sans no. de commande sont indiquées uniquement pour information de montage. Elles ne sont pas livrées individuellement. Pour que la livraison de pièces de rechange corresponde à la commande, veuillez bien nous fournir les données suivantes (voir plaque d'identité ci-dessous):

1. Modèle, no. de série et standard de construction de bloc compresseur/groupe
2. Quantité désirée
3. Dénomination et no. de commande de la pièce désirée

Exemple de commande:

Pour bloc compresseur ...
no. de série 524-0528/1/2, trois joints no. de cde. 8263-090

Wartungssätze

a =Wartungssatz 1000 h
b = Wartungssatz 2000 h
c = Wartungssatz 4000 h

In den Spalten sind die im entsprechenden Satz enthaltenen Teile angekreuzt. Bitte beachten, daß die höheren Sätze die untergeordneten nicht beinhalten, d.h. für eine 4000-Stunden-Wartung wird 1x Satz a, 1x Satz b und 1x Satz c benötigt.

Maintenance kit

a = Maintenance kit 1000 h
b = Maintenance kit 2000 h
c = Maintenance kit 4000 h

The columns contain the parts that are included in the respective parts set. Please note that the higher graded kits do not include the lower ones, i.e. for a 4000 hours maintenance, one kit a, one kit b plus one kit c are required.

Kits de pièces d'entretien :

a = Kit d'entretien 1000 h
b = Kit d'entretien 2000 h
c = Kit d'entretien 4000 h

Les pièces contenues dans les kits correspondants sont marquées d'une croix dans les colonnes. Veuillez observer que les kits supérieurs ne contiennent pas les kits subordonnés, c'est-à-dire pour un entretien de 4000 heures il faut avoir 1x kit a, 1x kit b et 1x kit c.

Anmerkungen zur Identifikation:
Remarks for identification:
Remarques pour l'identification:

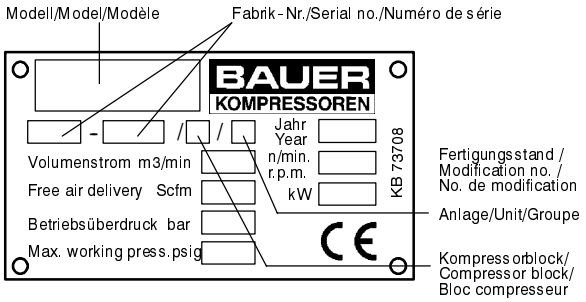

ACHTUNG

Nur Schrauben und Stiftschrauben der Qualität 8.8 verwenden!

ATTENTION

Use only screws and studs in quality 8.8! This quality is equivalent to SAE J 429 d grade 5.

ATTENTION

N'utiliser que des vis et des goujons filetés de la qualité 8.8!

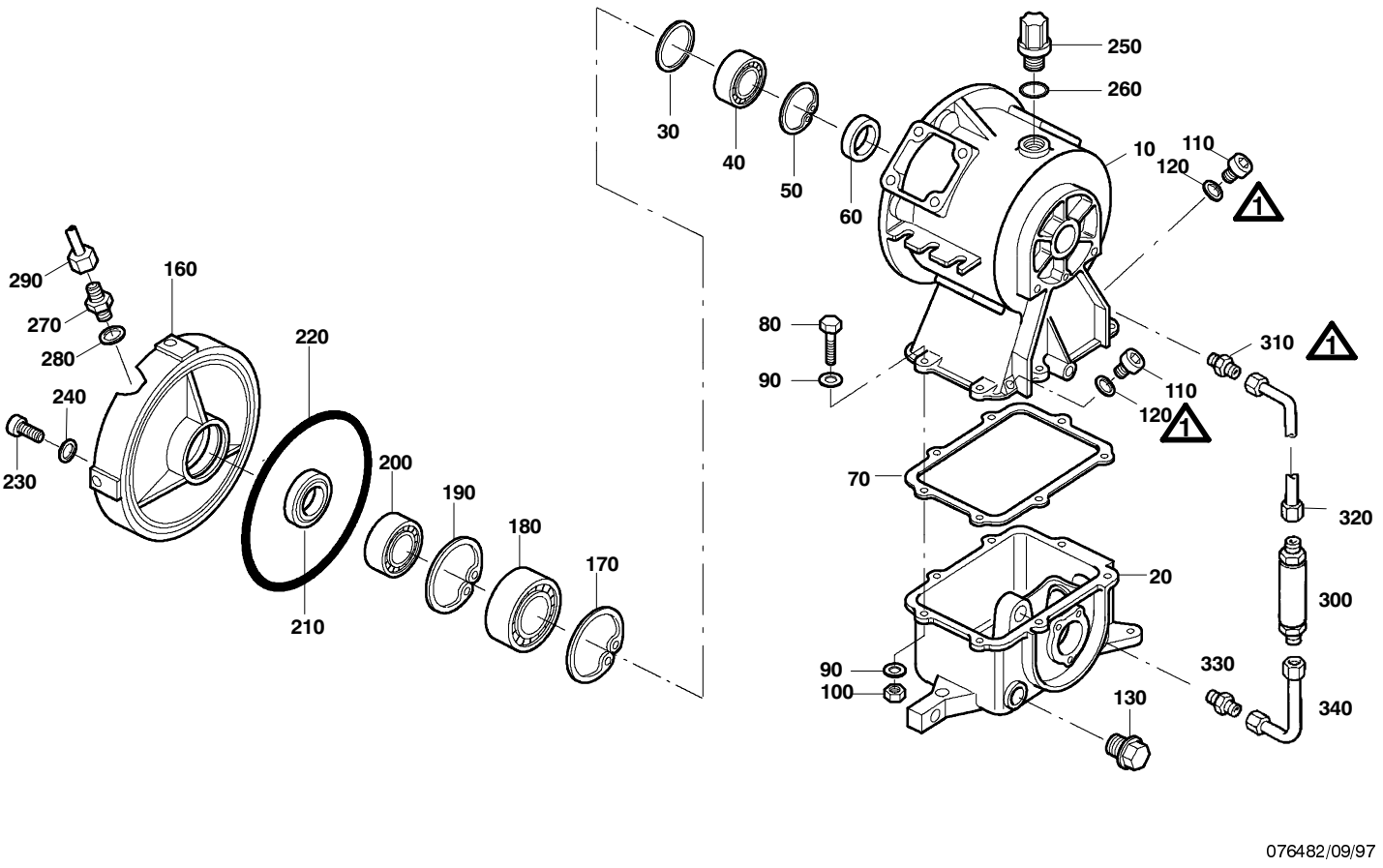

076482/09/97

Ersatzteilsätze
Spare parts sets
Kits de pièces dét.

Baugruppe 076482 Kurbelhehäuse
Assembly 076482 Crankcase
Assemblage 076482 Carter

A2.8- 1

Klasse/ Class/ Classe			Pos.	Bestell-Nr. Part No. No. de cde.	Anz. Qty. Qté.	Benennung	Designation	Dénomination	Gew. Weight Poids (kg)	Abmessungen Dimensions Dimensions
a	b	c								
			10	57298	1	Kurbelgehäuse-Oberteil	crankcase upper part	carter superieur		
			20	57428	1	Kurbelgehäuse-Unterteil	crankcase lower part	carter inferieur		
			30	N1030	1	Sprengring	snap ring	anneau-ressort	3 g	37x1.5
			40	N583	1	Nadellager	needle bearing	roulement a aiguilles	,075	20x37x17
			50	N818	1	Sicherungsring	circlip ring	anneau de retenue	4 g	DIN 472;37x1.5;FSt
			60	N582	1	Wellendichtring	shaft seal	garniture en anneau		BA20x37x10
			70	58300	1	Dichtung	gasket	joint		
			80	N756	7	Sechskantschraube	hexagon screw	vis hexagonale	19 g	DIN 933;M8x40;8.8
			90	N58	14	Scheibe	washer	rondelle	2 g	DIN 125;B 8.4;St;A3A
			100	N57	7	Sechskantmutter	hexagon nut	ecrou hexagonal	5 g	DIN 934;M8;8;A3A
			110	N15121	2	Zylinderschraube	allen screw	vis a six pans creux	29 g	DIN 912;M12x16;8.8
			120	N1316	2	Dichtung	gasket	joint	1 g	A13x20x2;Cu
			130	N3707	1	Verschlußschraube	plug	bouchon filete		G3/8A;5.8;schwarz
			160	58503	1	Lagerdeckel	bearing cap	chapeau de palier		
			170	N3016	1	Sicherungsring	circlip ring	anneau de retenue	18 g	DIN 472;72x2.5
			180	N525	1	Rillenkugellager	Grooved ball bearing	Roulem. rainure a billes	,29 kg	35x72x17
			190	N17689	1	Sicherungsring	circlip ring	anneau de retenue	6 g	DIN 472;47x1.75;FSt
			200	N3015	1	Zylinderrollenlager	cylindrical roller bearing	roulement a rouleaux	,11 kg	30x47x17
			210	N3013	1	Wellendichtring	shaft seal	garniture en anneau		DIN 3760;A30x42x7
			220	N4653	1	O-Ring	o-ring	joint torique		210x3;NBR;72Shore
			230	N109	6	Zylinderschraube	allen screw	vis a six pans creux	17 g	DIN 912;M8x30;8.8
			240	N58	6	Scheibe	washer	rondelle	2 g	DIN 125;B 8.4;St;A3A
			250	61054	1	Verschlußschraube	plug	bouchon filete		G1
			260	N15412	1	O-Ring	o-ring	joint torique		32.92x3.53;FPM;75Sh.
			270	61043	1	Gerader Einschraubst.	straight male connector	raccord droit male	75 g	BKM-GES 12 LR;R1/2
			280	N293	1	Dichtring	gasket	joint	3 g	DIN 7603;A21x28x1.5
			290	069890	1	Verbindungsleitung kpl.	conection pipe cpl.	tube de connection cpl.		Entlüftungsleitung

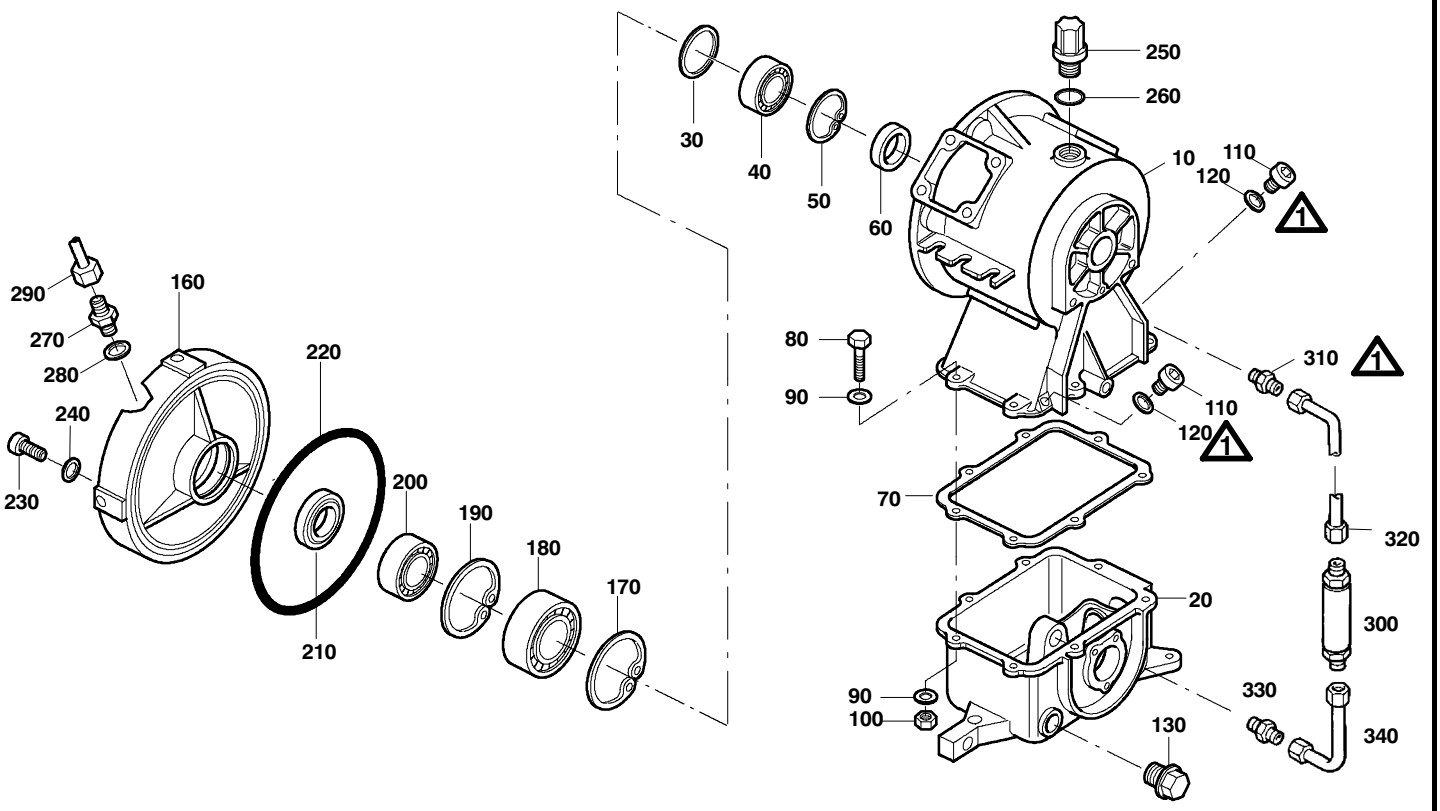

076482/09/97

Ersatzteilsätze
Spare parts sets
Kits de pièces dét.

Baugruppe 076482 Kurbelhehäuse
Assembly 076482 Crankcase
Assemblage 076482 Carter

A2.8- 1

Klasse/ Class/ Classe			Pos.	Bestell-Nr. Part No. No. de cde.	Anz. Qty. Qté.	Benennung	Designation	Dénomination	Gew. Weight Poids (kg)	Abmessungen Dimensions Dimensions
a	b	c								
			300	074574	1	Ölschauglas kpl.				
			310	N20237	1	Gerader-Einschraubst.	connector	raccord	14 g	GES 6 LR-WD;G1/8
			320		1	Verbindungsleitung kpl.				v.KG-Oberteil z.Ölsch.
			330	N22950	1	Gerader-Einschraubst.			54 g	GES 10 LR1/2-WD
			340		1	Verbindungsleitung kpl.				v.Ölschauglas z. K-G

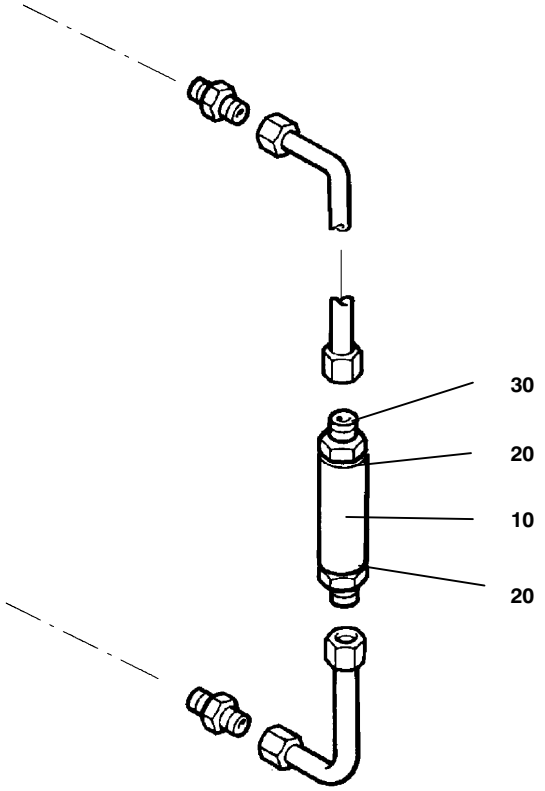

074574/09/97

Ersatzteilsätze
Spare parts sets
Kits de pièces dét.

Baugruppe 074574 Ölschauglas kpl.
Assembly 074574 Oil sight gauge assy.
Assemblage 074574

A2.8- 1a

Klasse/ Class/ Classe			Pos.	Bestell-Nr. Part No. No. de cde.	Anz. Qty. Qté.	Benennung	Designation	Dénomination	Gew. Weight Poids (kg)	Abmessungen Dimensions Dimensions
a	b	c								
			10	74566	1	Ölschauglas				
			20	N23647	2	O-Ring				11.91x2.62;NBR;70Sh.
			30	74558	1	Ölkontrollverschraubung				

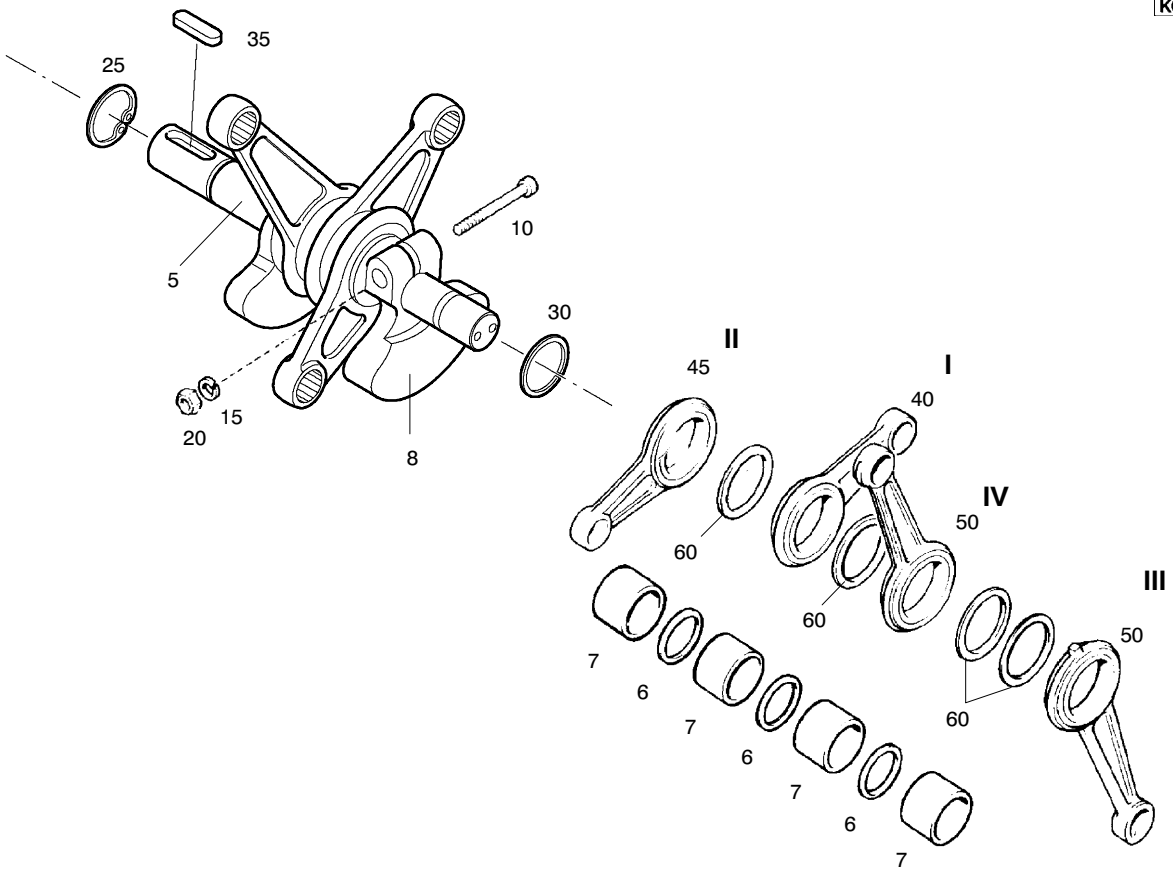

063544/09/97

Ersatzteilsätze
Spare parts sets
Kits de pièces dét.

Baugruppe 063544 Triebwerk
Assembly 063544 Driving gear
Assemblage 063544 Embiellage

A2.8- 2

Klasse/ Class/ Classe			Pos.	Bestell-Nr. Part No. No. de cde.	Anz. Qty. Qté.	Benennung	Designation	Dénomination	Gew. Weight Poids (kg)	Abmessungen Dimensions Dimensions
a	b	c								
			5	*	1	Kurbelwelle				
			6	1529	3	Distanz-Scheibe	shim	rondelle		
			7	N17294	4	Innenring	needle bearing inner ring	anneau interieur de roule.	,045	25x32x13
			8	*	1	Gegengewicht				
			10	N1235	1	Zylinderschraube	allen screw	vis a six pans creux	31 g	DIN 912 ; M8x65 ; 8.8
			15	N108	1	Federring	spring washer	anneau-ressort	1 g	DIN 127 ; A 8
			20	N2765	1	Selbstsichernde Mutter	hexagon nut self-locking	ecrou hexagonal auto-fr.		DIN 980 ; V M8 ; 8
			25	N1407	1	Sicherungsring	circlip ring	anneau de retenue	4 g	DIN 471 ; 35x1.5
			30	N1029	1	Sprengring	snap ring	anneau-ressort		WR 20 ; Fa. INA
			35	N166	1	Paßfeder	feather key	ressort d'ajustage	16,9 g	DIN 6885 ; A8x7x40
			40	072886	1	Pleuel kpl.	con-rod assy.	bielle cpl.		
			45	072888	1	Pleuel kpl.	con-rod assy.	bielle cpl.		
			50	072885	2	Pleuel kpl.	con-rod assy.	bielle cpl.		
			55	N17293	4	Nadelkranz	needle bearing	couronne aiquille	,018	32x37x13
			60	4180	4	Distanz-Scheibe	spacer disc	disque d'ecartement		f. Pleuel

* Nur zusammen lieferbar Only available together Ne sont livrées qu'ensemble

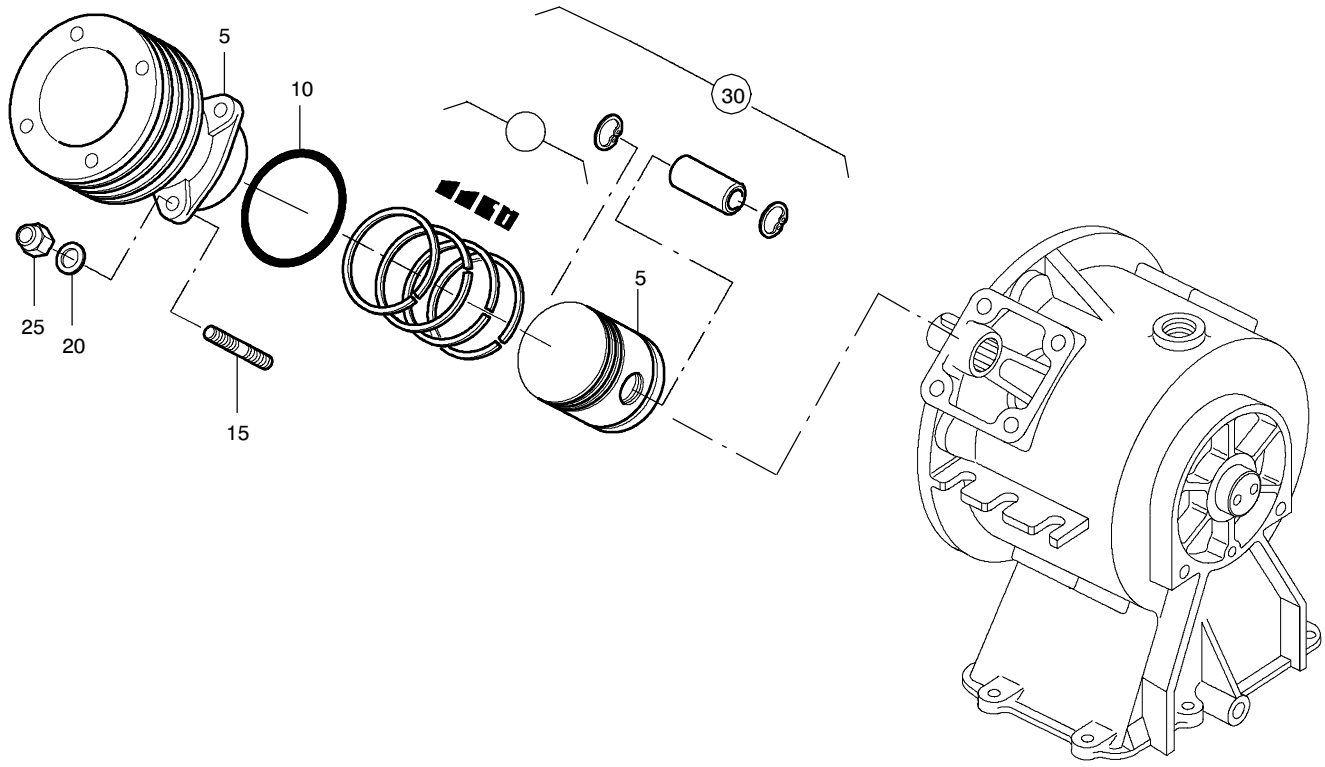

063361/09/97

Ersatzteilsätze
Spare parts sets
Kits de pièces dét.

Baugruppe 063361 Zylinder
Assembly 063361 Cylinder
Assemblage 063361 Cylindre

A2.8- 3

Klasse/ Class/ Classe			Pos.	Bestell-Nr. Part No. No. de cde.	Anz. Qty. Qté.	Benennung	Designation	Dénomination	Gew. Weight Poids (kg)	Abmessungen Dimensions Dimensions
a	b	c								
			5	63345	1	Zylinder	cylinder	cylindre		
		X	10	N4654	1	O-Ring	o-ring	joint torique		90x2
			15	N215	4	Stiftschraube	stud	goujon filete		DIN 835 ; M8x25 ; 8.8
			20	N58	4	Scheibe, rund	washer	rondelle	2 g	DIN 125 ; B 8.4
		X	25	N370	4	Sechskantmutter	hexagon nut self-locking	ecrou hexagonal auto-fr.		DIN 980 ; N M8 ; 8
			30	**069844**	**1**	**Kolben kpl.**	**piston cpl.**	**piston cpl.**		

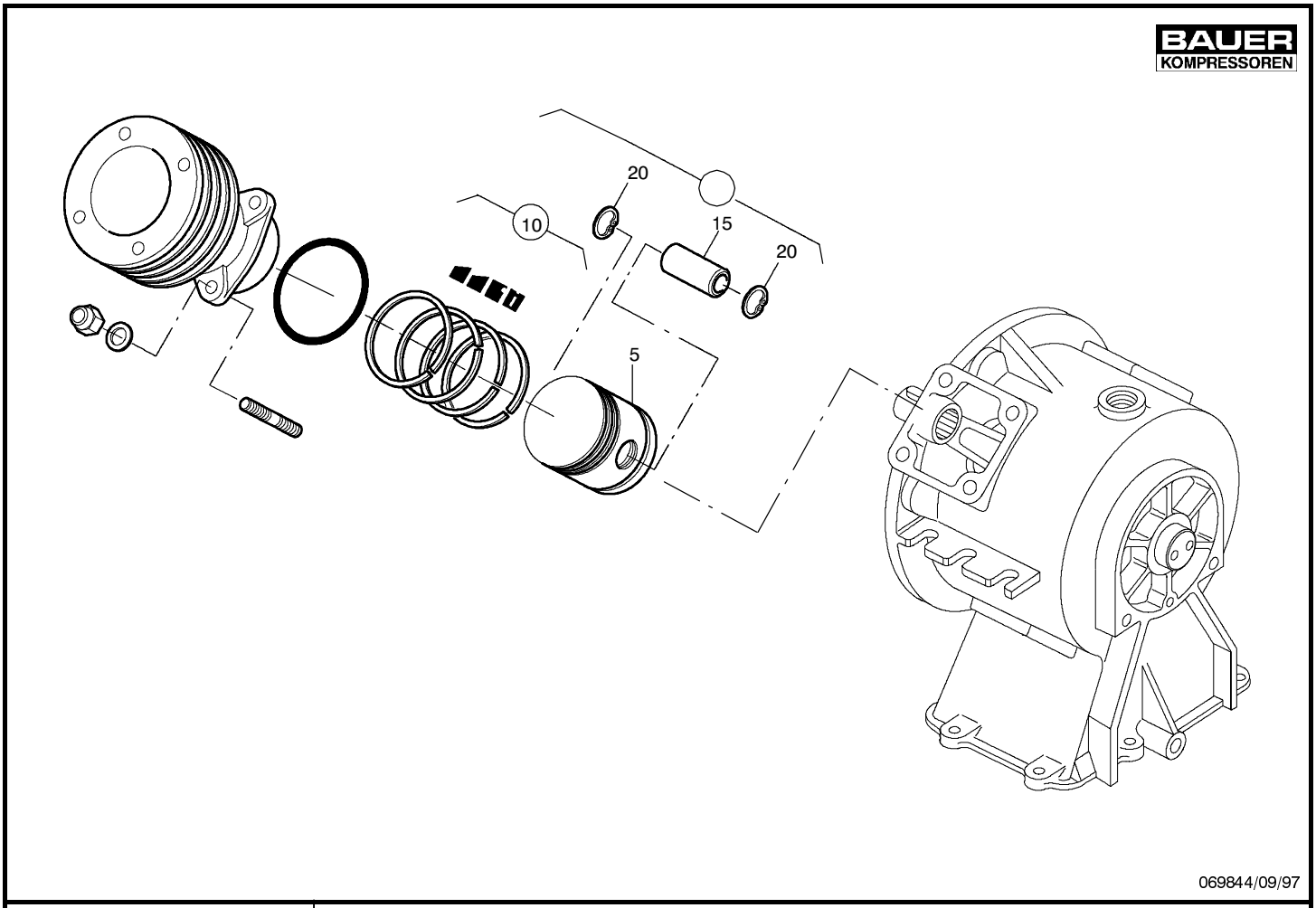

Ersatzteilsätze
Spare parts sets
Kits de pièces dét.

Baugruppe 069844 Kolben kpl.
Assembly 069844 Piston assy.
Assemblage 069844 Piston cpl.

A2.8- 3a

Klasse/ Class/ Classe a	b	c	Pos.	Bestell-Nr. Part No. No. de cde.	Anz. Qty. Qté.	Benennung	Designation	Dénomination	Gew. Weight Poids (kg)	Abmessungen Dimensions Dimensions
			5		1	Kolben			,435	88x3x14
			10	**N1787**	**1**	**Kolbenringsatz**	**piston ring set**	**jeu des segments de p.**	**90 g**	
			15		1	Kolbenbolzen				DIN 73126 ; 14x9x78.5
			20	N1033	2	Sicherungsring	circlip ring	anneau de retenue	1 g	DIN 472 ; 14x1

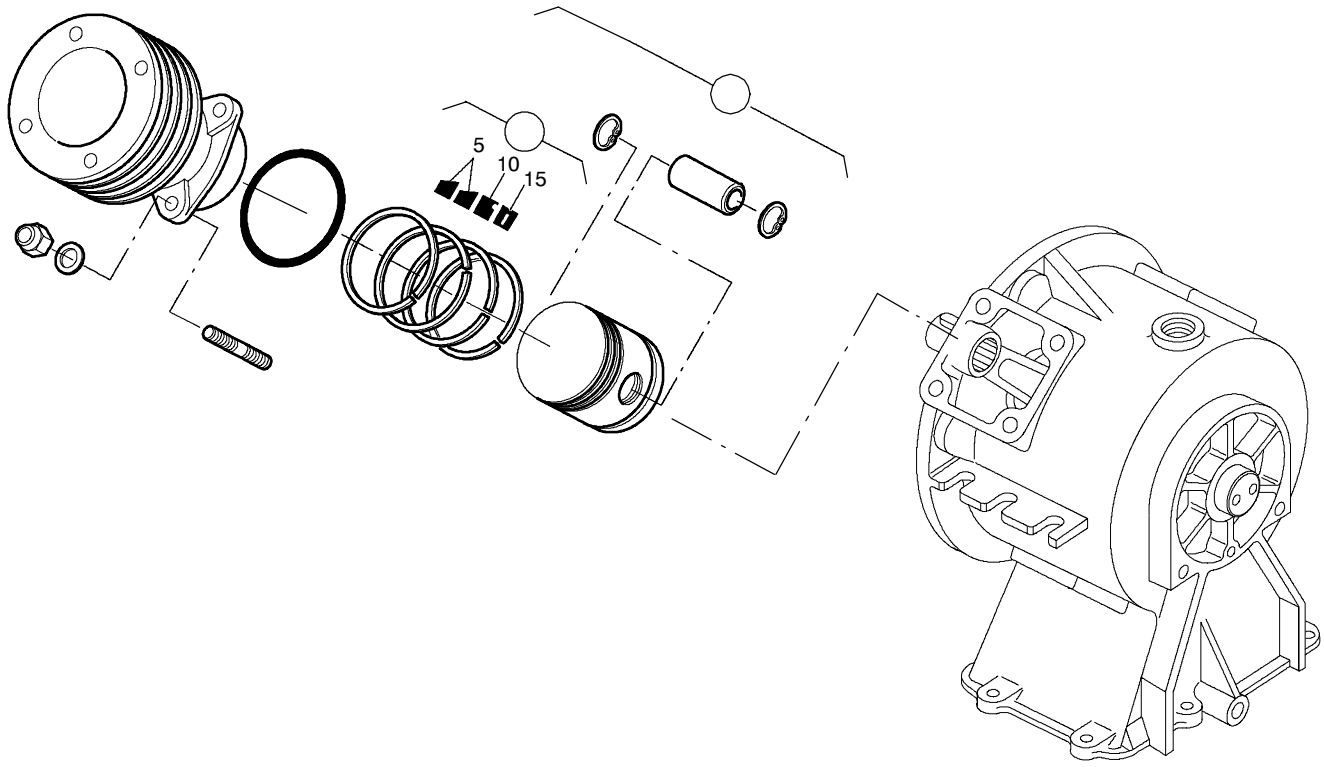

N1787/09/97

Ersatzteilsätze
Spare parts sets
Kits de pièces dét.

Baugruppe N1787 Kolbenringsatz
Assembly N1787 Piston ring set
Assemblage N1787 Jeu des segments de piston

A2.8- 3b

Klasse/ Class/ Classe			Pos.	Bestell-Nr. Part No. No. de cde.	Anz. Qty. Qté.	Benennung	Designation	Dénomination	Gew. Weight Poids (kg)	Abmessungen Dimensions Dimensions
a	b	c								
			5	*	2	Minutenring			22 g	88/80.4x3
			10	*	1	Nasenring			21 g	DIN 70930 ; 88/80.6x3
			15	*	1	Ölschlitzring			25 g	88/80.4x3.5

* Nur zusammen lieferbar Only available together Ne sont livrées qu'ensemble

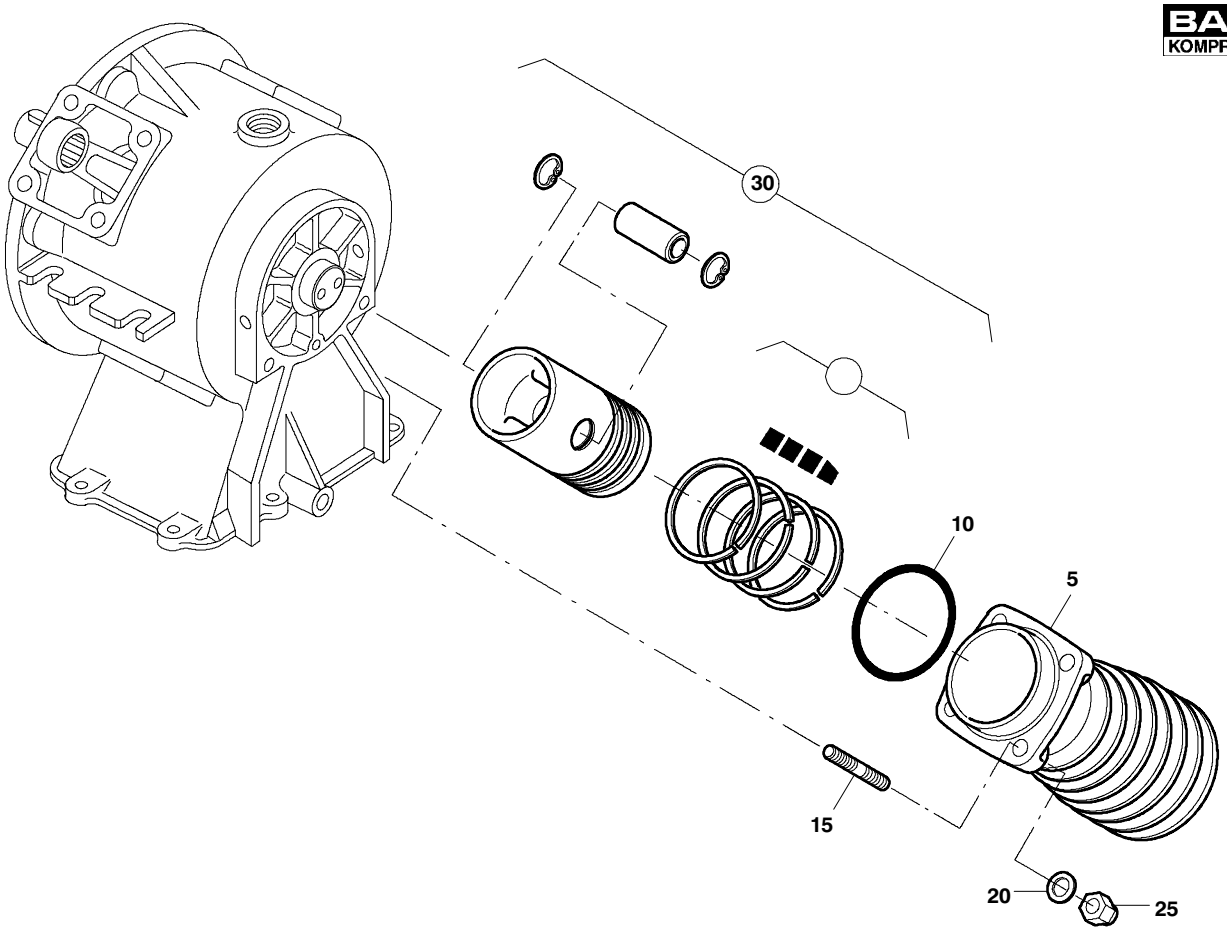

058303/09/97

Ersatzteilsätze
Spare parts sets
Kits de pièces dét.

Baugruppe 058303 Zylinder
Assembly 058303 Cylinder
Assemblage 058303 Cylindre

A2.8- 4

Klasse/ Class/ Classe			Pos.	Bestell-Nr. Part No. No. de cde.	Anz. Qty. Qté.	Benennung	Designation	Dénomination	Gew. Weight Poids (kg)	Abmessungen Dimensions Dimensions
a	b	c								
			5	5611	1	Zylinder	cylinder	cylindre		
		X	10	N4064	1	O-Ring	o-ring	joint torique		50x2
			15	N215	4	Stiftschraube	stud	goujon filete		DIN 835 ; M8x25 ; 8.8
			20	N58	4	Scheibe, rund	washer	rondelle	2 g	DIN 125 ; B 8.4
		X	25	N370	4	Sechskantmutter	hexagon nut self-locking	ecrou hexagonal auto-fr.		DIN 980 ; NM8 ; 8.8
			30	**069845**	**1**	**Kolben kpl.**	**piston cpl.**	**piston cpl.**		

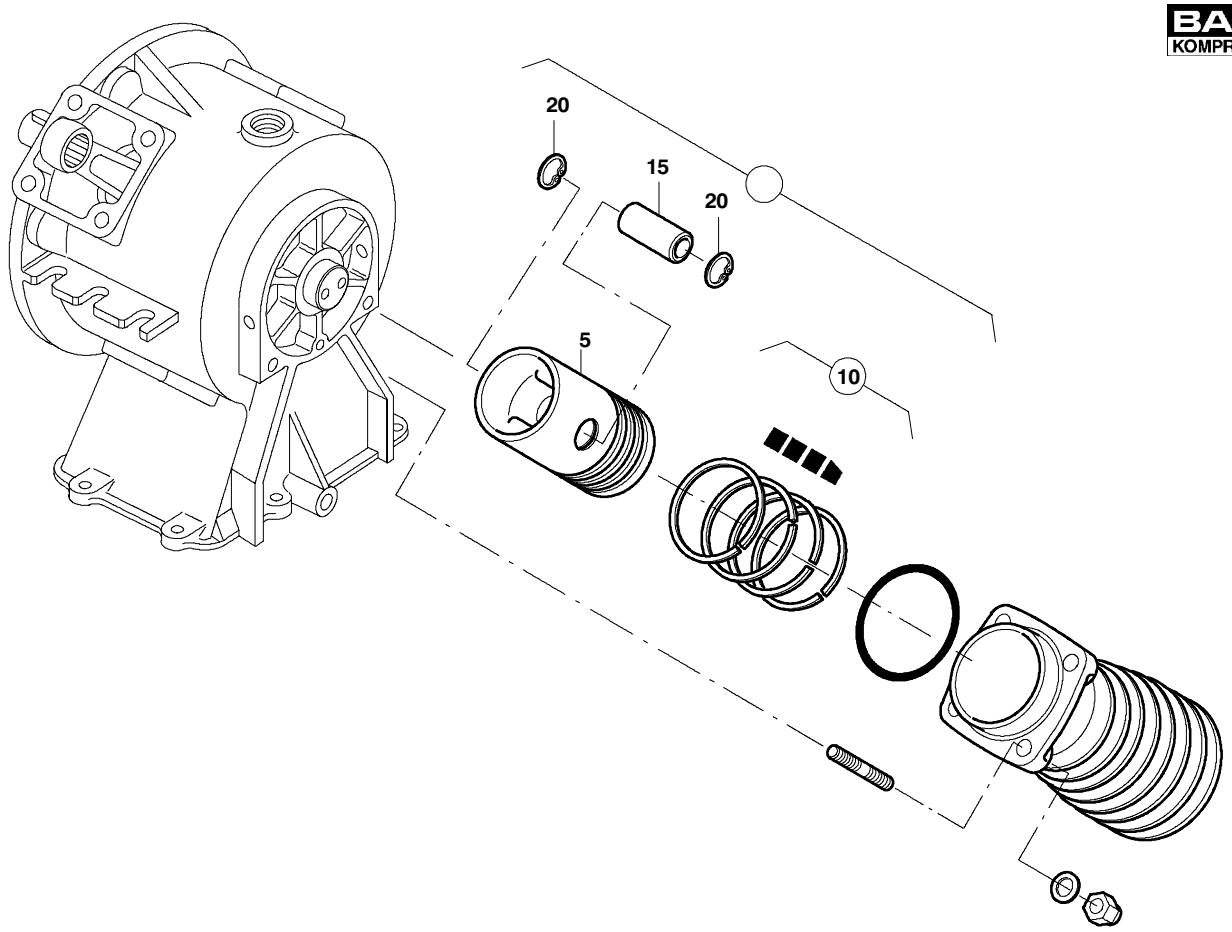

059845/09/97

Ersatzteilsätze
Spare parts sets
Kits de pièces dét.

Baugruppe 069845 Kolben kpl.
Assembly 069845 Piston assy.
Assemblage 069845 Piston cpl.

A2.8- 4a

Klasse/ Class/ Classe			Pos.	Bestell-Nr. Part No. No. de cde.	Anz. Qty. Qté.	Benennung	Designation	Dénomination	Gew. Weight Poids (kg)	Abmessungen Dimensions Dimensions
a	b	c								
			5		1	Kolben			,11 kg	45x4x14
			10	**N1082**	**1**	**Kolbenringsatz**	**piston ring set**	**jeu des segments de p.**	**8 g**	
			15		1	Kolbenbolzen	piston pin			DIN 73126 ; 14x9x37
			20	N1033	2	Sicherungsring	circlip	anneau de retenue	1 g	DIN 472 ; 14x1

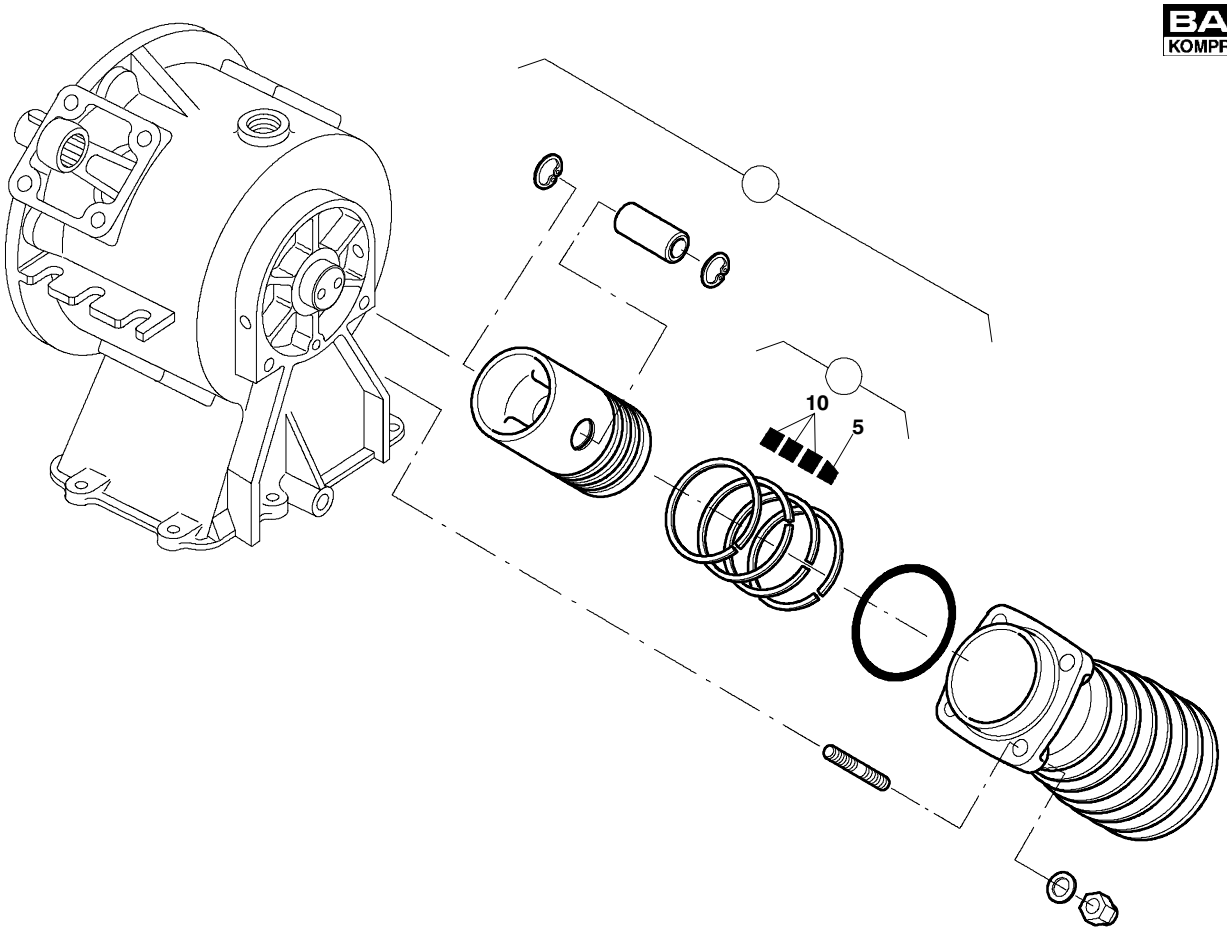

N10823/09/97

Ersatzteilsätze
Spare parts sets
Kits de pièces dét.

Baugruppe N1082 Kolbenringsatz
Assembly N1082 Piston rjing set
Assemblage N1082 Jeu des segments de piston

A2.8- 4b

Klasse/ Class/ Classe			Pos.	Bestell-Nr. Part No. No. de cde.	Anz. Qty. Qté.	Benennung	Designation	Dénomination	Gew. Weight Poids (kg)	Abmessungen Dimensions Dimensions
a	b	c								
			5	*	1	Minutenring			4 g	DIN 70911 ; 45/41.2x2
			10	*	3	Rechteckring			8 g	DIN 70910 ; 45/41.2x2

* Nur zusammen lieferbar Only available together Ne sont livrées qu'ensemble

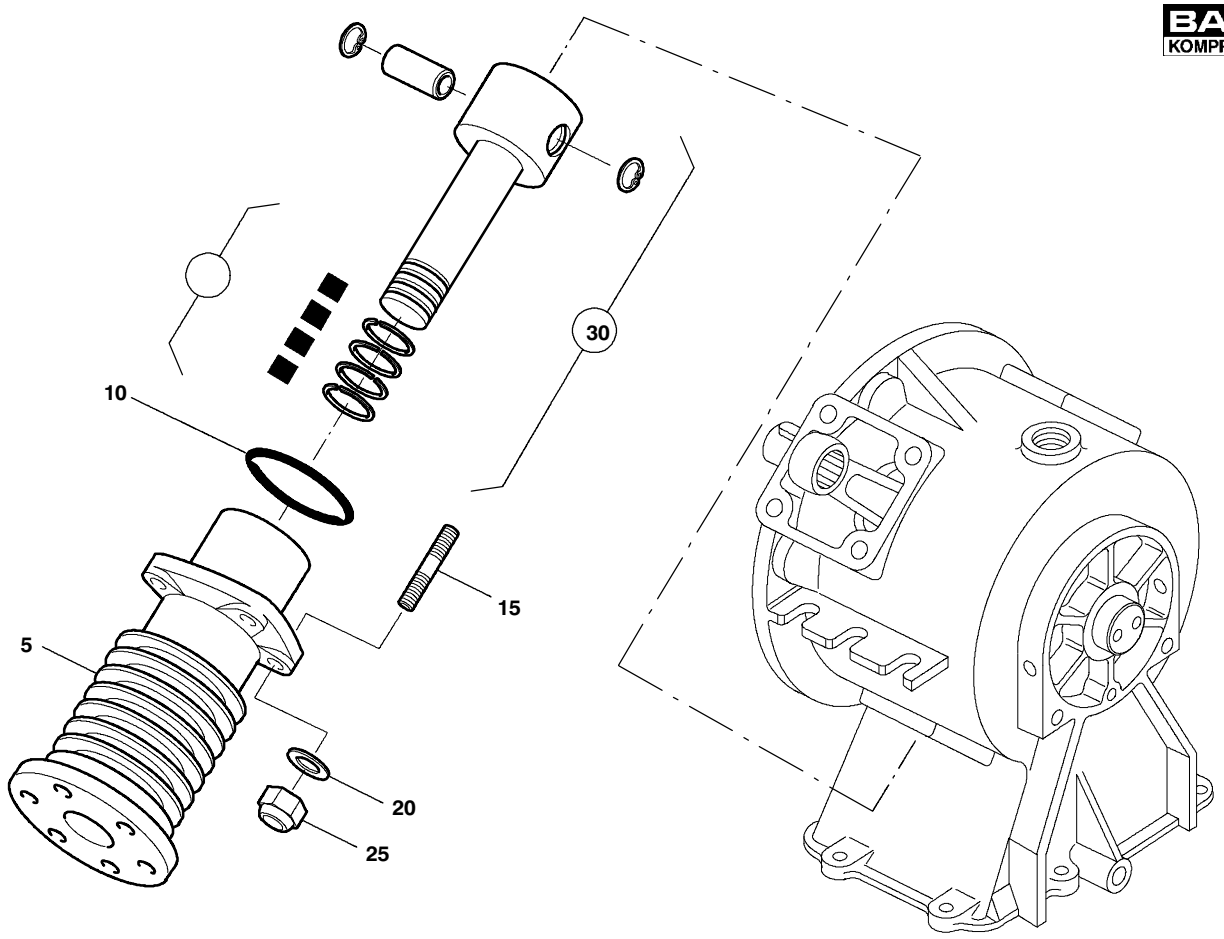

058304/09/97

Ersatzteilsätze
Spare parts sets
Kits de pièces dét.

Baugruppe 058304 Zylinder
Assembly 058304 Cylinder
Assemblage 058304 Cylindre

A2.8- 5

Klasse/ Class/ Classe			Pos.	Bestell-Nr. Part No. No. de cde.	Anz. Qty. Qté.	Benennung	Designation	Dénomination	Gew. Weight Poids (kg)	Abmessungen Dimensions Dimensions
a	b	c								
			5	4214	1	Zylinder	cylinder	cylindre		
		X	10	N4064	1	O-Ring	o-ring	joint torique		50x2
			15	N215	4	Stiftschraube	stud	goujon filete		DIN 835 ; M8x25 ; 8.8
			20	N58	4	Scheibe, rund	washer	rondelle	2 g	DIN 125 ; B 8.4
		X	25	N370	4	Sechskantmutter	hexagon nut self-locking	ecrou hexagonal auto-fr.		DIN 980 ; N M8 ; 8
			30	**069846**	**1**	**Kolben kpl.**	**piston cpl.**	**piston cpl.**		

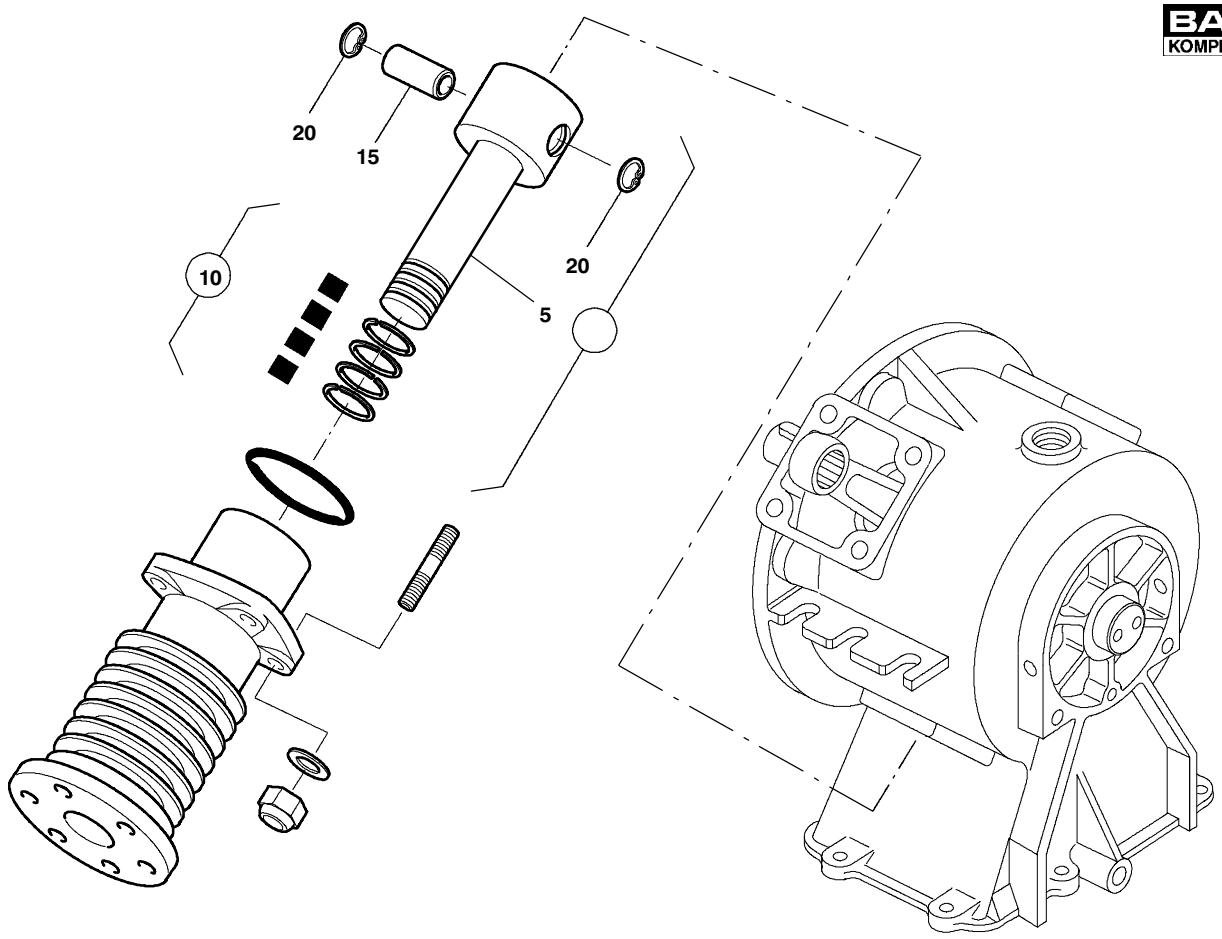

069846/09/97

Ersatzteilsätze
Spare parts sets
Kits de pièces dét.

Baugruppe 069846 Kojlben kpl.
Assembly 069846 Piston assy.
Assemblage 069846 Piston cpl.

A2.8- 5a

Klasse/ Class/ Classe			Pos.	Bestell-Nr. Part No. No. de cde.	Anz. Qty. Qté.	Benennung	Designation	Dénomination	Gew. Weight Poids (kg)	Abmessungen Dimensions Dimensions
a	b	c								
			5		1	Kolben			,155	22x4x14
			10	**N1084**	**1**	**Kolbenringsatz**	**piston ring set**	**jeu des segments de p.**	**4 g**	
			15		1	Kolbenbolzen				DIN 73126 ; 14x9x37
			20	N1033	2	Sicherungsring	circlip ring	anneau de retenue	1 g	DIN 472 ; 14x1

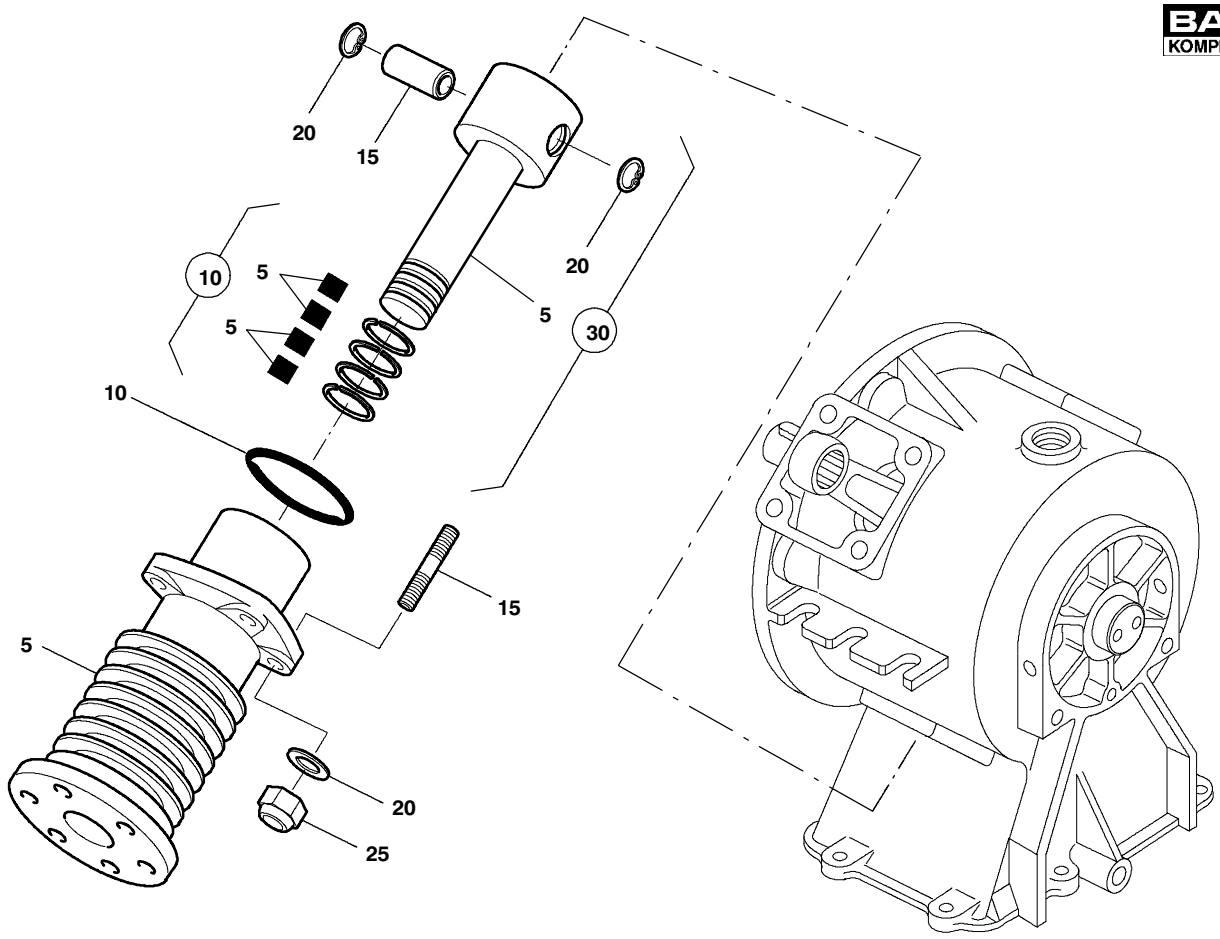

N1084/09/97

Ersatzteilsätze
Spare parts sets
Kits de pièces dét.

Baugruppe N1084 Kolbenringsatz
Assembly N1084 Piston ring set
Assemblage N1084 Jeu des segments de piston

A2.8- 5b

Klasse/ Class/ Classe			Pos.	Bestell-Nr. Part No. No. de cde.	Anz. Qty. Qté.	Benennung	Designation	Dénomination	Gew. Weight Poids (kg)	Abmessungen Dimensions Dimensions
a	b	c								
			5	*	4	Rechteckring			1 g	DIN 34110 ; 22/20.1x2

* Nur zusammen lieferbar Only available together Ne sont livrées qu'ensemble

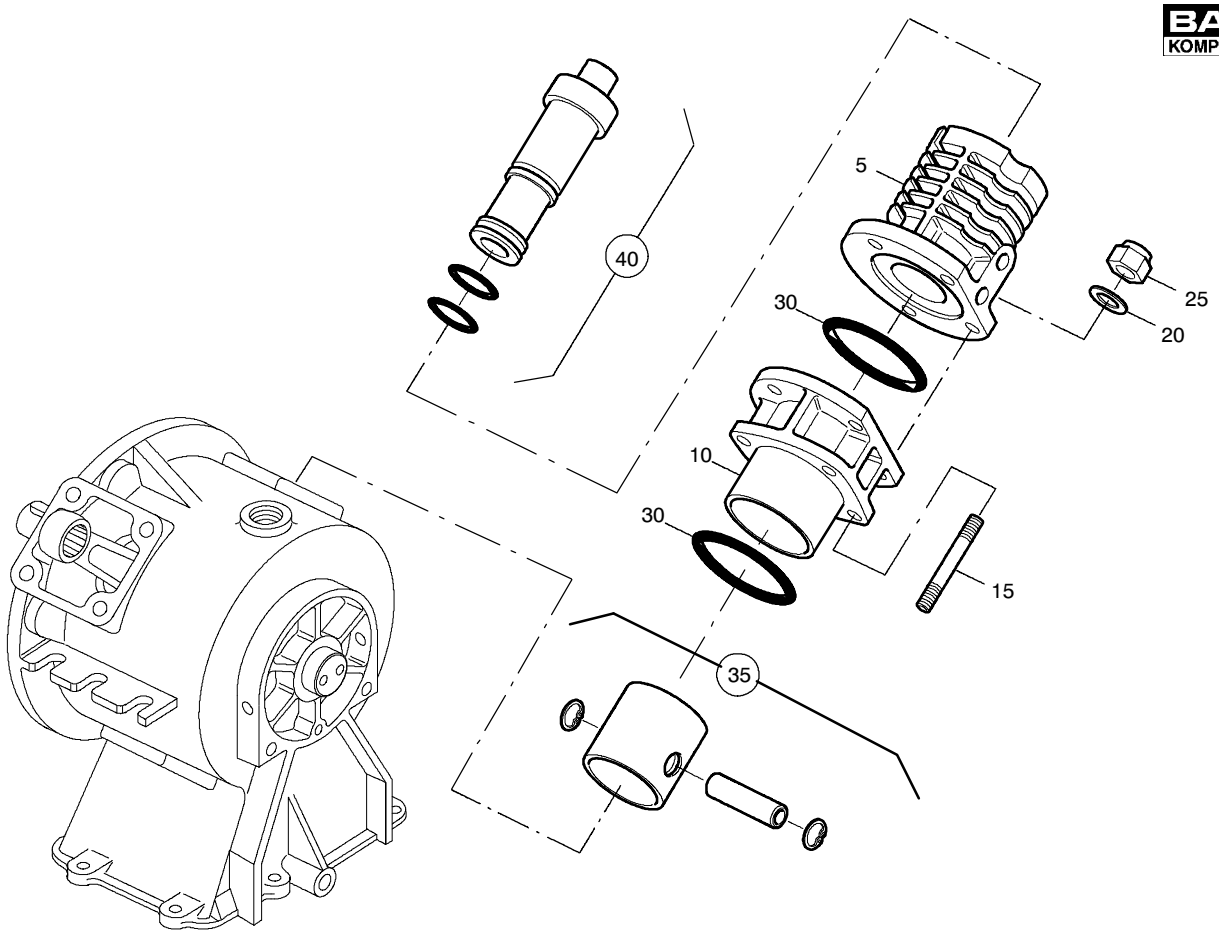

063550/09/97

Ersatzteilsätze
Spare parts sets
Kits de pièces dét.

Baugruppe 063550 Zylinder
Assembly 063550 Cylinder
Assemblage 063550 Cylindre

A2.8- 6

Klasse/ Class/ Classe			Pos.	Bestell-Nr. Part No. No. de cde.	Anz. Qty. Qté.	Benennung	Designation	Dénomination	Gew. Weight Poids (kg)	Abmessungen Dimensions Dimensions
a	b	c								
			5	56352	1	Zylinder-Oberteil	cylinder upper part	cylindre partie superieure		
			10	56141	1	Zylinder-Unterteil	cylinder lower part	cylindre partie inferieure		
			15	N4065	4	Stiftschraube	stud	goujon filete	70 g	DIN 835 ; M8x70 ; 8.8
			20	N58	4	Scheibe, rund	washer	rondelle	2 g	DIN 125 ; B 8.4
		X	25	N370	4	Sechskantmutter	hexagon nut self-locking	ecrou hexagonal auto-fr.		DIN 980 ; N M8 ; 8
		X	30	N4064	2	O-Ring	o-ring	joint torique		50x2
			35	**069847**	**1**	**Kolben kpl.**	**piston cpl.**	**piston cpl.**		
	X		**40**	**014742**	**1**	**Kolbenbüchse kpl.**	**piston and sleeve**	**douille de piston**		

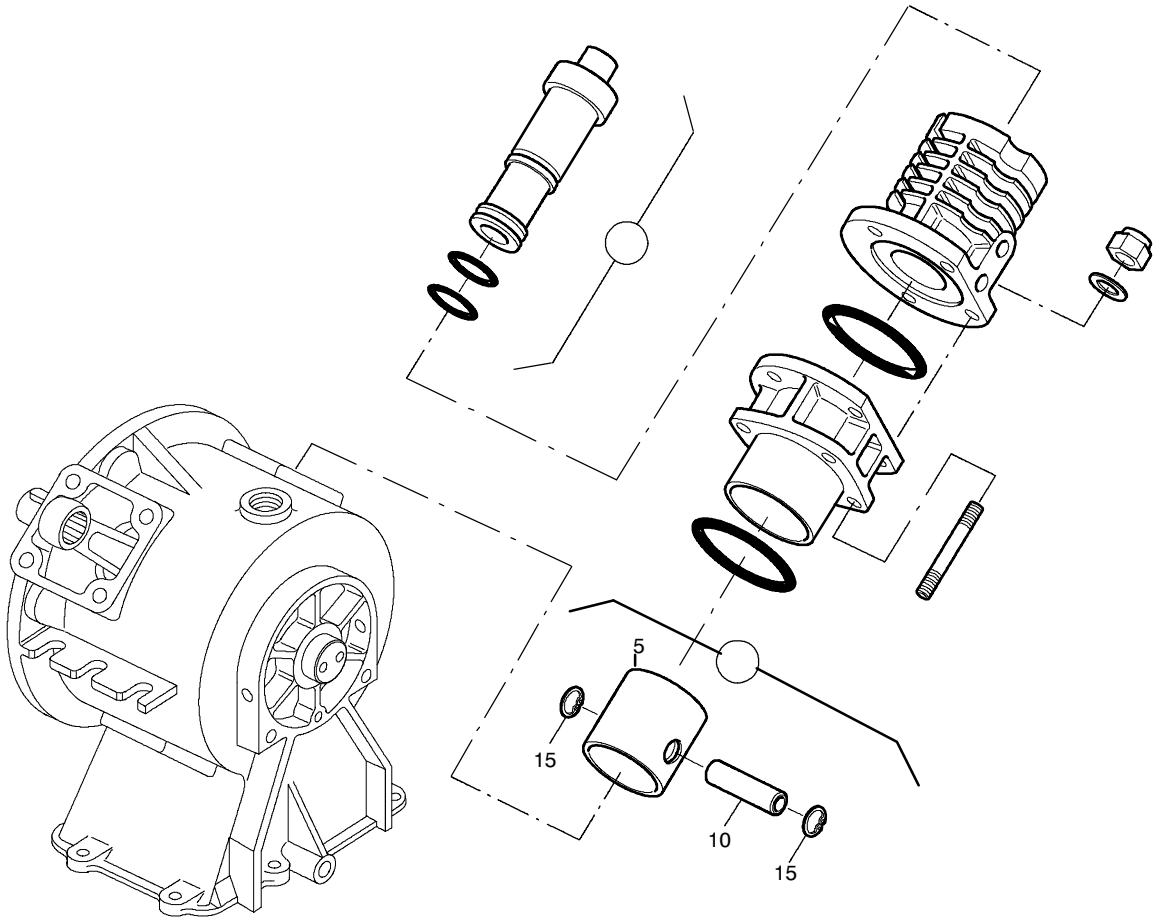

069847/09/97

Ersatzteilsätze
Spare parts sets
Kits de pièces dét.

Baugruppe 069847 Kolben kpl.
Assembly 069847 Piston assy.
Assemblage 069847 Piston cpl.

A2.8- 6a

Klasse/ Class/ Classe			Pos.	Bestell-Nr. Part No. No. de cde.	Anz. Qty. Qté.	Benennung	Designation	Dénomination	Gew. Weight Poids (kg)	Abmessungen Dimensions Dimensions
a	b	c								
			5	63421	1	Führungskolben	piston	piston		
			10		1	Kolbenbolzen				DIN 73126 ; 14x9x37
			15	N1033	2	Sicherungsring	circlip ring	anneau de retenue	1 g	DIN 472 ; 14x1

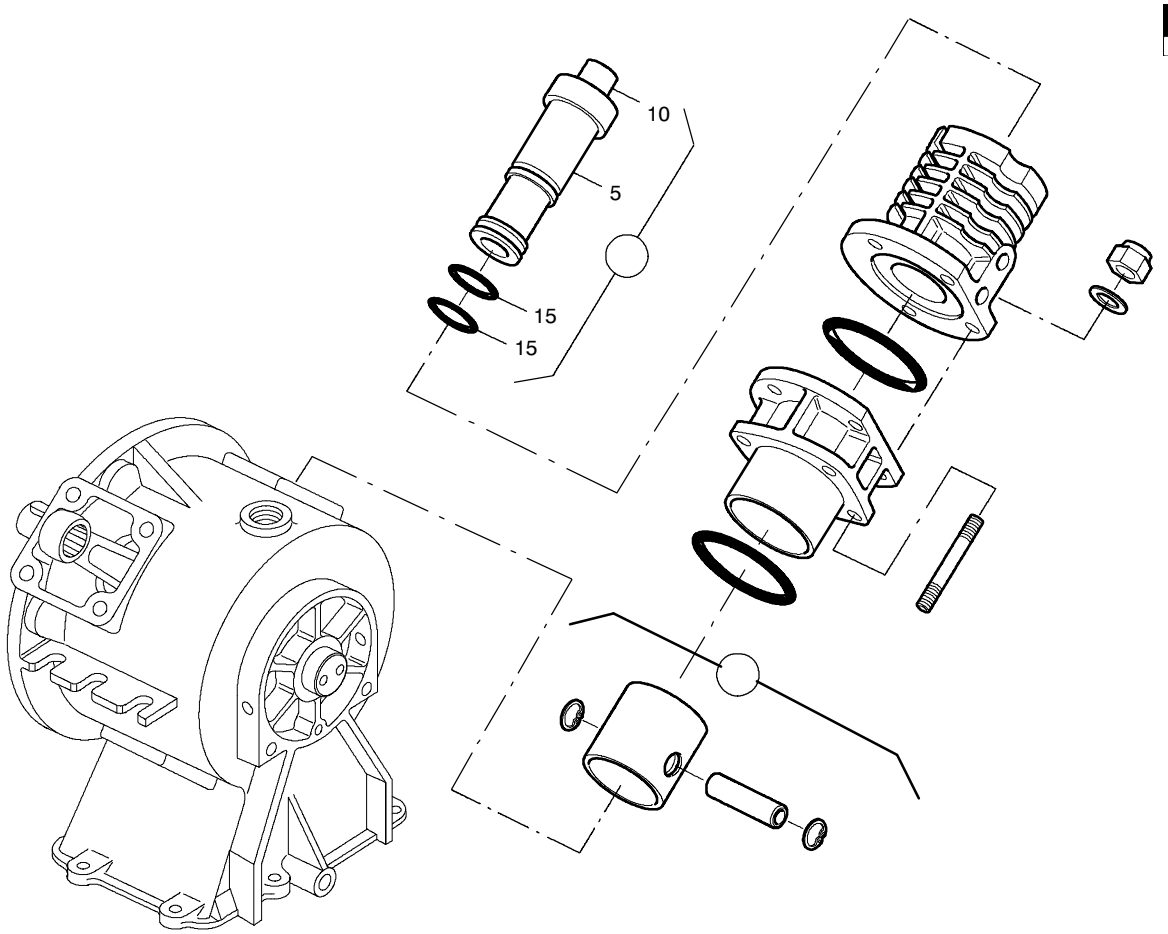

014742/09/97

Ersatzteilsätze
Spare parts sets
Kits de pièces dét.

Baugruppe 014742 Kolbenbüchse
Assembly 014742 Piston and sleeve assy.
Assemblage 014742 Douille de piston cpl.

A2.8- 6b

Klasse/ Class/ Classe			Pos.	Bestell-Nr. Part No. No. de cde.	Anz. Qty. Qté.	Benennung	Designation	Dénomination	Gew. Weight Poids (kg)	Abmessungen Dimensions Dimensions
a	b	c								
			5		1	Kolbenbüchse				
			10		1	Kolben				12x0x0
			15	N2507	2	O-Ring	o-ring	joint torique		18.77x1.78

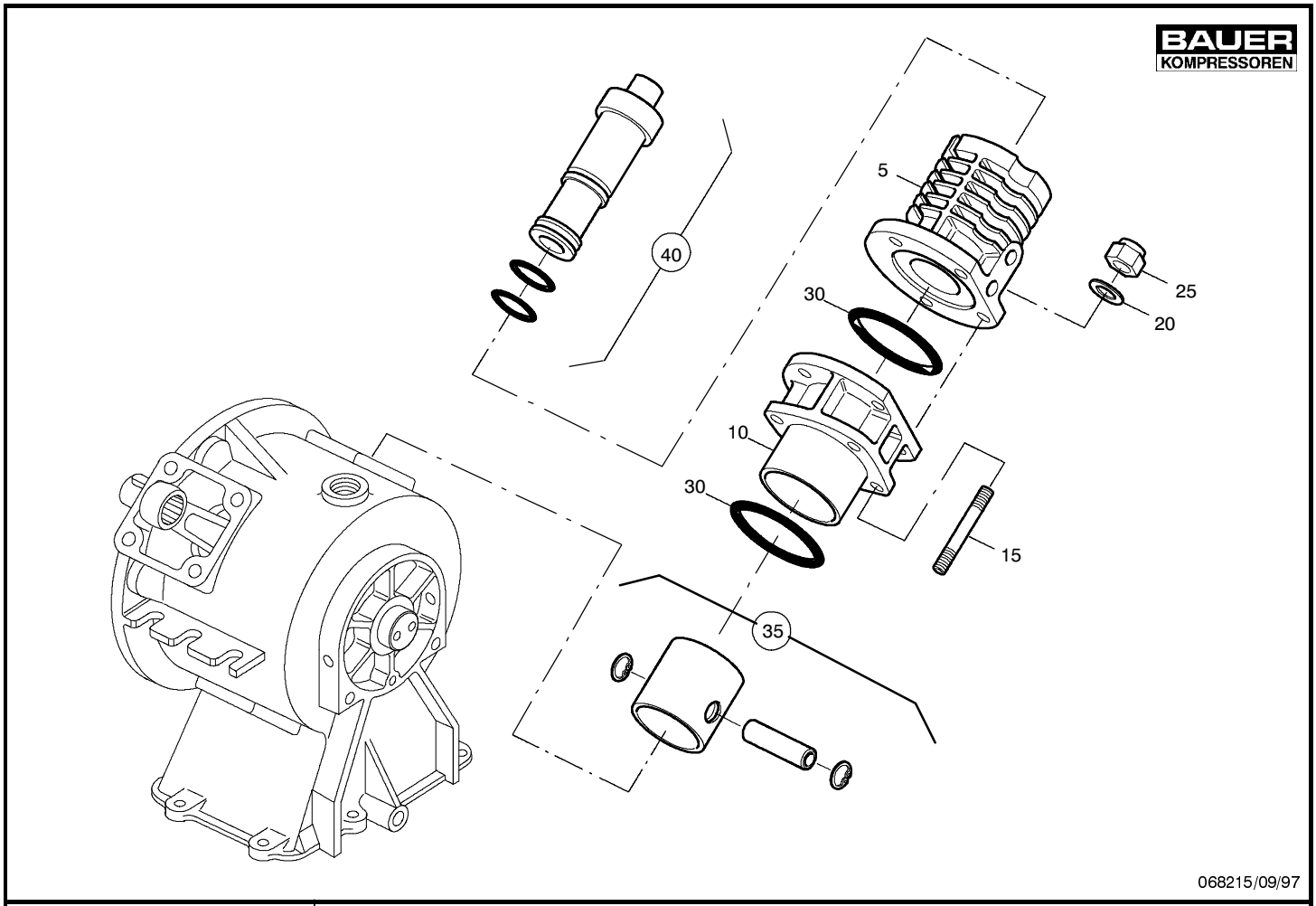

068215/09/97

Ersatzteilsätze
Spare parts sets
Kits de pièces dét.

Baugruppe 068215 Zylinder
Assembly 068215 Cylinder
Assemblage 068215 Cylindre

A2.8- 7

Klasse/ Class/ Classe			Pos.	Bestell-Nr. Part No. No. de cde.	Anz. Qty. Qté.	Benennung	Designation	Dénomination	Gew. Weight Poids (kg)	Abmessungen Dimensions Dimensions
a	b	c								
			5	56352	1	Zylinder-Oberteil	cylinder upper part	cylindre partie superieure		
			10	56141	1	Zylinder-Unterteil	cylinder lower part	cylindre partie inferieure		
		X	15	N4064	2	O-Ring	o-ring	joint torique		50x2
			20	N4065	4	Stiftschraube	stud	goujon filete	70 g	DIN 835 ; M8x70 ; 8.8
			25	N58	4	Scheibe, rund	washer	rondelle	2 g	DIN 125 ; B 8.4
		X	30	N370	4	Sechskantmutter	hexagon nut self-locking	ecrou hexagonal auto-fr.		DIN 980 ; N M8 ; 8
			35	**069847**	**1**	**Kolben kpl.**	**piston cpl.**	**piston cpl.**		
	X		**40**	**068214**	**1**	**Kolbenbüchse kpl.**	**piston and sleeve**	**douille de piston**		

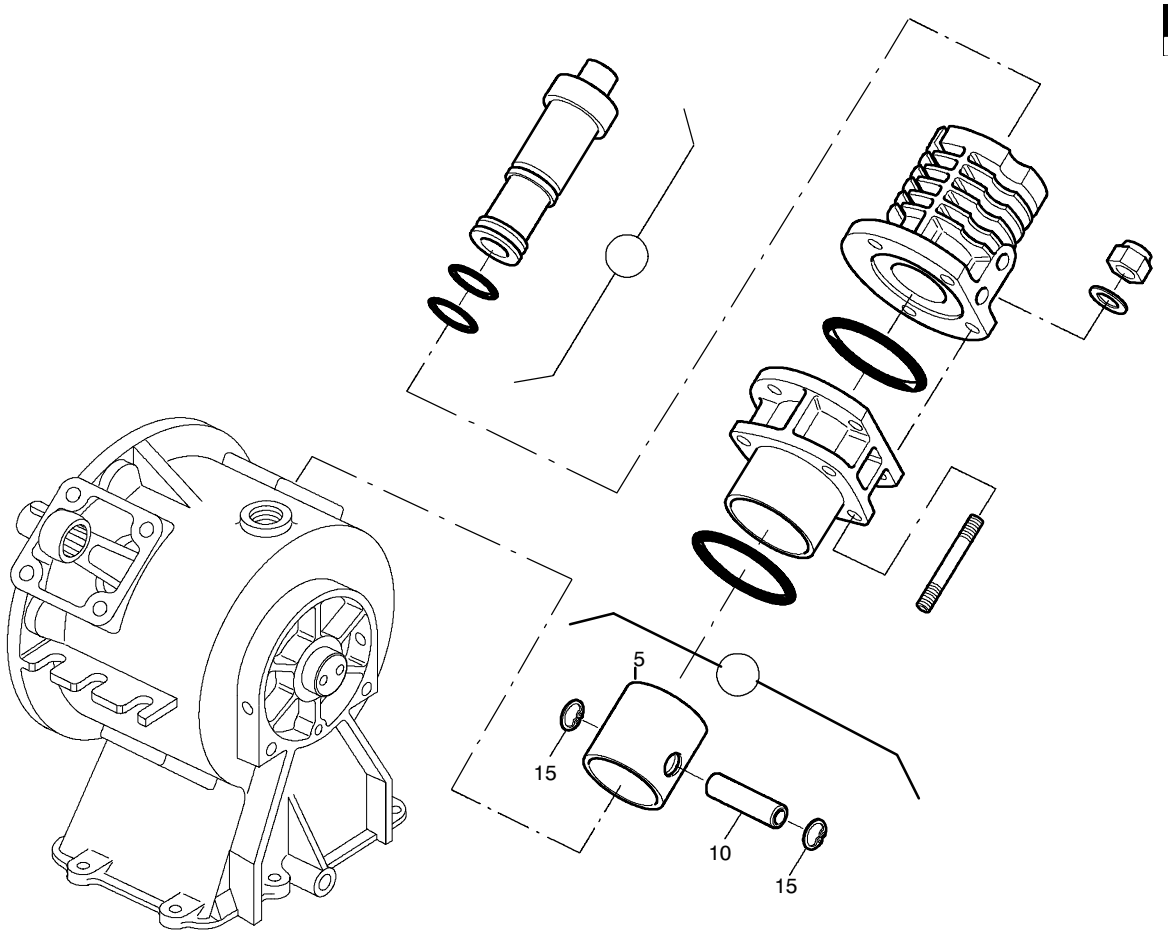

069847/09/97

Ersatzteilsätze
Spare parts sets
Kits de pièces dét.

Baugruppe 069847 Kolben kpl.
Assembly 069847 Piston assy.
Assemblage 069847 Piston cpl.

A2.8- 7a

Klasse/ Class/ Classe			Pos.	Bestell-Nr. Part No. No. de cde.	Anz. Qty. Qté.	Benennung	Designation	Dénomination	Gew. Weight Poids (kg)	Abmessungen Dimensions Dimensions
a	b	c								
			5	63421	1	Führungskolben	piston	piston		
			10		1	Kolbenbolzen				DIN 73126 ; 14x9x37
			15	N1033	2	Sicherungsring	circlip ring	anneau de retenue	1 g	DIN 472 ; 14x1

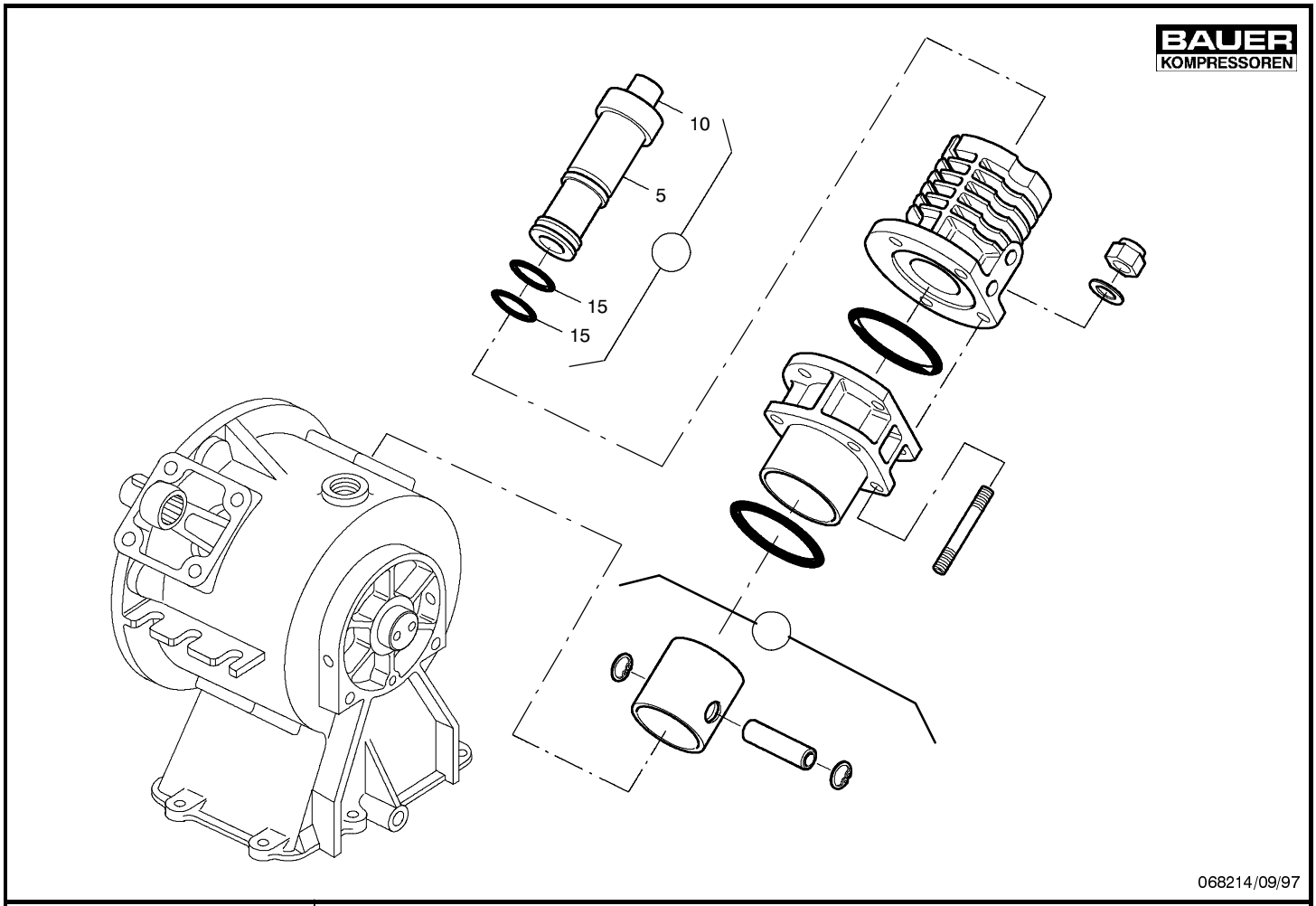

068214/09/97

Ersatzteilsätze
Spare parts sets
Kits de pièces dét.

Baugruppe 068214 Kolbenbüchse
Assembly 068214 Piston and sleeve assy.
Assemblage 068214 Douille de piston cpl.

A2.8- 7b

Klasse/ Class/ Classe			Pos.	Bestell-Nr. Part No. No. de cde.	Anz. Qty. Qté.	Benennung	Designation	Dénomination	Gew. Weight Poids (kg)	Abmessungen Dimensions Dimensions
a	b	c								
			5	*	1	Kolbenbüchse				
			10	*	1	Kolben				12x0x0
			15	N2507	2	O-Ring	o-ring	joint torique		18.77x1.78

* Nur zusammen lieferbar only available togetzer Ne s ont livrées qu'ensemble

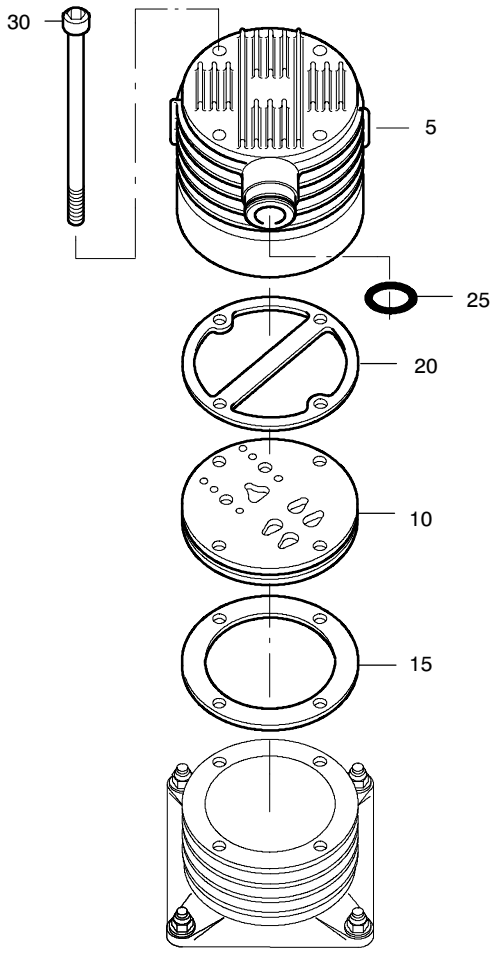

069790/09/97

Ersatzteilsätze
Spare parts sets
Kits de pièces dét.

Baugruppe 069790 Ventilkopf 1. Stufe
Assembly 069790 Valve head 1st stage
Assemblage 069790 Culasse 1e étage

A2.8- 8

Klasse/ Class/ Classe			Pos.	Bestell-Nr. Part No. No. de cde.	Anz. Qty. Qté.	Benennung	Designation	Dénomination	Gew. Weight Poids (kg)	Abmessungen Dimensions Dimensions
a	b	c								
			5	63335	1	Ventilkopf	valve head	tete de soupape		
	X		10	N4670	1	Lamellenventil	reed valve	soupape a lamelles		304 SLV
X			15	58262	1	Zylinder-Dichtung	gasket	joint		
X			20	63340	1	Ventilkopf-Dichtung	valve head gasket	joint de tete de soupape		
			25	N1539	1	O-Ring	o-ring	joint torique		30.3x2.4
			30	N9253	4	Zylinderschraube	allen screw	vis a six pans creux		DIN 912 ; M8x110 ; 8.8

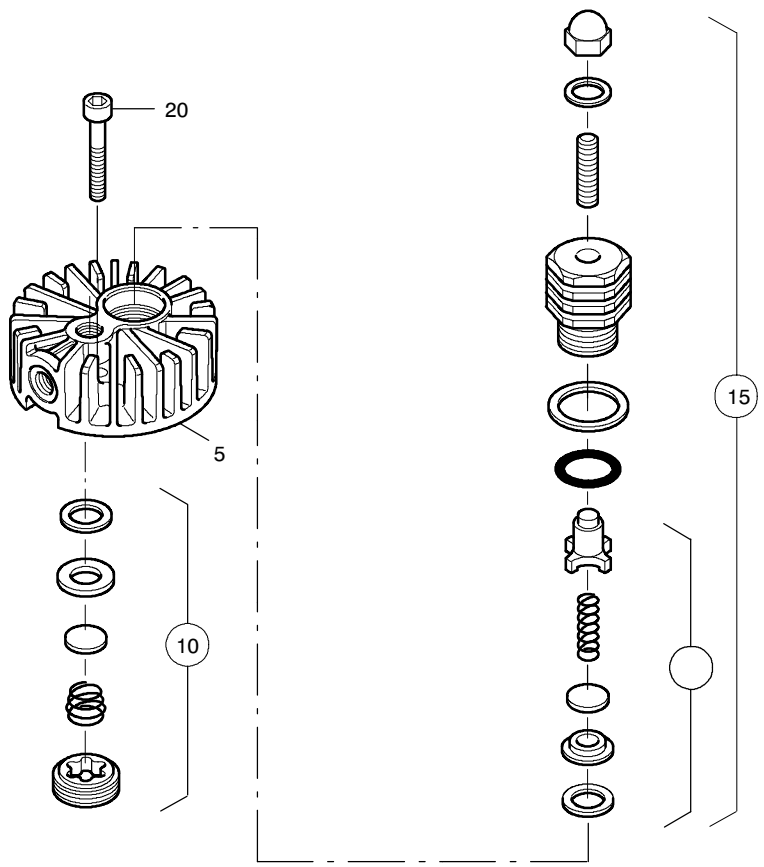

069791/01/94

Ersatzteilsätze
Spare parts sets
Kits de pièces dét.

Baugruppe 069791 Ventilkopf
Assembly 069791 Valve head
Assemblage 069791 Culasse

A2.8- 9

Klasse/ Class/ Classe			Pos.	Bestell-Nr. Part No. No. de cde.	Anz. Qty. Qté.	Benennung	Designation	Dénomination	Gew. Weight Poids (kg)	Abmessungen Dimensions Dimensions
a	b	c								
			5	14123	1	Ventilkopf	valve head	tete de soupape	,5 kg	
			10	**012841**	**1**	**Saugventil**	**suction valve**	**clapet d'aspiration**		
			15	**014583**	**1**	**Druckventil kpl.**	**pressure valve**	**soupape de pression**	**,2 kg**	
			20	N503	6	Zylinderschraube	allen screw	vis a six pans creux	19 g	DIN 912 ; M8x35 ; 8.8

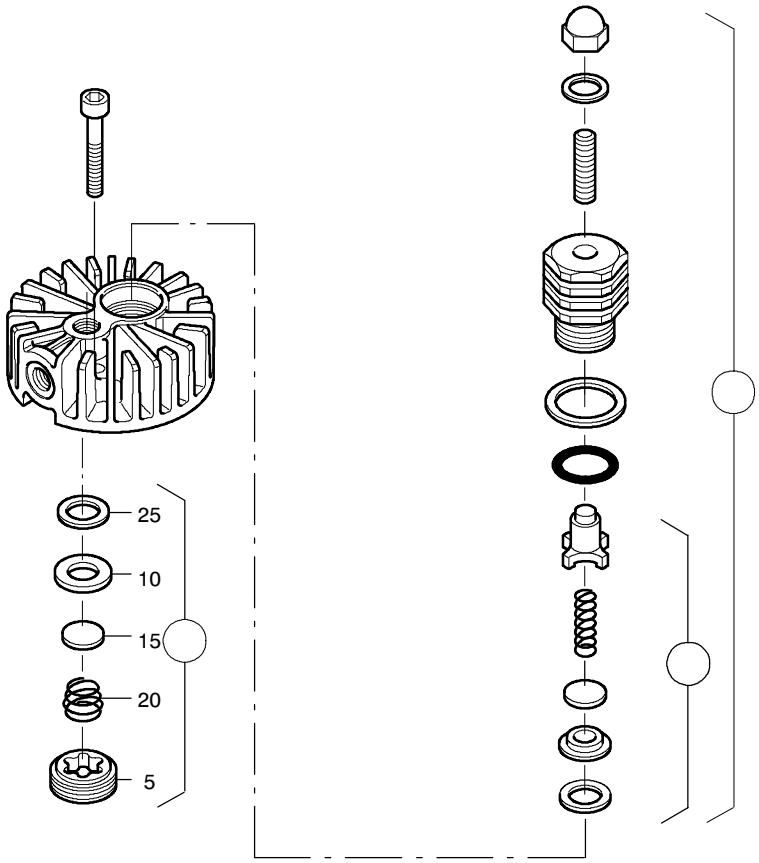

012841/09/97

Ersatzteilsätze
Spare parts sets
Kits de pièces dét.

Baugruppe 012841 Saugventil
Assembly 012841 intake valve
Assemblage 012841 Clapet d'aspiration

A2.8- 9a

Klasse/ Class/ Classe			Pos.	Bestell-Nr. Part No. No. de cde.	Anz. Qty. Qté.	Benennung	Designation	Dénomination	Gew. Weight Poids (kg)	Abmessungen Dimensions Dimensions
a	b	c								
			5		1	Ventilverschraubung				
			10		1	Ventilsitz				
			15		1	Ventilplatte	valve plate	plate de soupape		
			20		1	Druckfeder				
			25	240	1	Dichtung	gasket	joint	5 g	

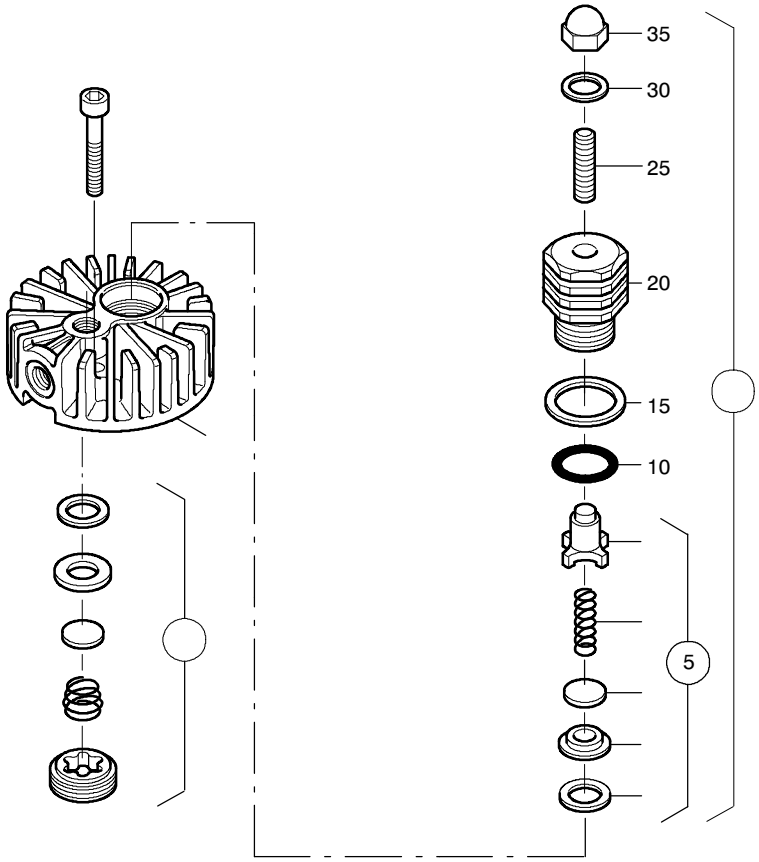

014583/09/97

Ersatzteilsätze
Spare parts sets
Kits de pièces dét.

Baugruppe 014583 Druckventil kpl.
Assembly 014583 Pressure valve assy.
Assemblage 014583 Soupape de pression cpl.

A2.8- 9b

Klasse/ Class/ Classe			Pos.	Bestell-Nr. Part No. No. de cde.	Anz. Qty. Qté.	Benennung	Designation	Dénomination	Gew. Weight Poids (kg)	Abmessungen Dimensions Dimensions
a	b	c								
			5	**012840**	**1**	**Druckventileinsatz kpl.**	**pressure valve insert**	**garniture de soupape**		
			10	N3521	1	O-Ring	o-ring	joint torique		21.82x3.53
			15	14332	1	Tellerfeder	spring washer	ressort a disque		
			20	14124	1	Verschraubung	coupling	raccord		
			25	71064	1	Gewindestift	stud	goujon filete		
			30	N380	1	Dichtung	gasket	joint	1 g	DIN 7603 ; C8x14x1.5
			35	N84	1	Sechskant-Hutmutter	acorn nut	ecrou a chapeau	11 g	DIN 1587 ; M8 ; 6

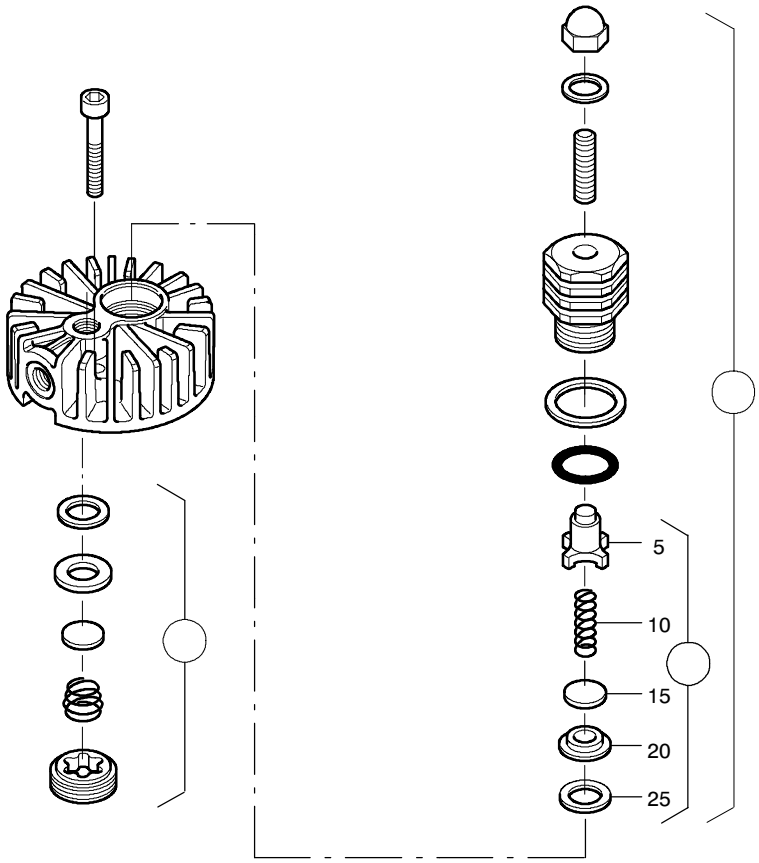

012840/09/97

Ersatzteilsätze
Spare parts sets
Kits de pièces dét.

Baugruppe 012840 Druckventileinsatz kpl.
Assembly 012840 Pressure valve insert assy
Assemblage 012840 Garniture de soupape de pression cpl.

A2.8- 9c

Klasse/ Class/ Classe			Pos.	Bestell-Nr. Part No. No. de cde.	Anz. Qty. Qté.	Benennung	Designation	Dénomination	Gew. Weight Poids (kg)	Abmessungen Dimensions Dimensions
a	b	c								
			5		1	Druckventileinsatz				
			10	1026	1	Ventilfeder	valve spring	ressort du clapet		
			15		1	Ventilplatte	valve plate	plate de soupape		
			20		1	Ventilsitz				
			25	240	1	Dichtung	gasket	joint	5 g	

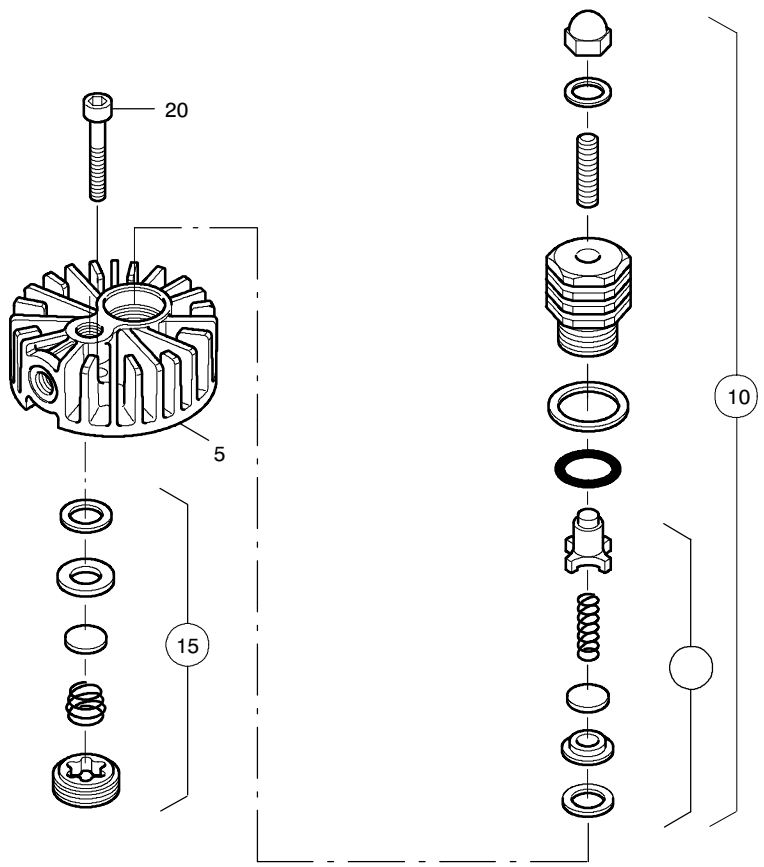

069791/01/94

Ersatzteilsätze
Spare parts sets
Kits de pièces dét.

Baugruppe 069792 Ventilkopf
Assembly 069792 Valve head
Assemblage 069792 Culasse

A2.8- 10

Klasse/ Class/ Classe			Pos.	Bestell-Nr. Part No. No. de cde.	Anz. Qty. Qté.	Benennung	Designation	Dénomination	Gew. Weight Poids (kg)	Abmessungen Dimensions Dimensions
a	b	c								
			5	14123	1	Ventilkopf	valve head	tete de soupape	,5 kg	
			10	**014582**	**1**	**Druckventil kpl.**	**pressure valve**	**soupape de pression**	**,2 kg**	
			15	**012836**	**1**	**Saugventil**	**suction valve**	**clapet d'aspiration**		
			20	N503	6	Zylinderschraube	allen screw	vis a six pans creux	19 g	DIN 912 ; M8x35 ; 8.8

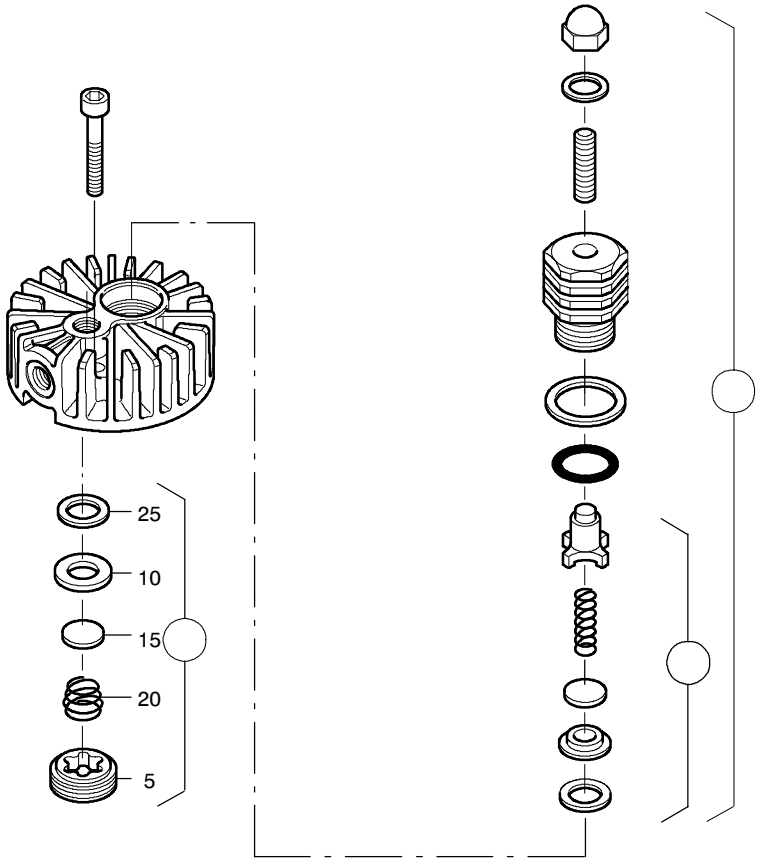

012841/09/97

Ersatzteilsätze
Spare parts sets
Kits de pièces dét.

Baugruppe 012836 Saugventil
Assembly 012836 intake valve
Assemblage 012836 Clapet d'aspiration

A2.8- 10a

Klasse/ Class/ Classe			Pos.	Bestell-Nr. Part No. No. de cde.	Anz. Qty. Qté.	Benennung	Designation	Dénomination	Gew. Weight Poids (kg)	Abmessungen Dimensions Dimensions
a	b	c								
			5		1	Ventilverschraubung				
			10		1	Ventilsitz				
			15		1	Ventilplatte	valve plate	plate de soupape		
			20		1	Druckfeder				
			25	240	1	Dichtung	gasket	joint	5 g	

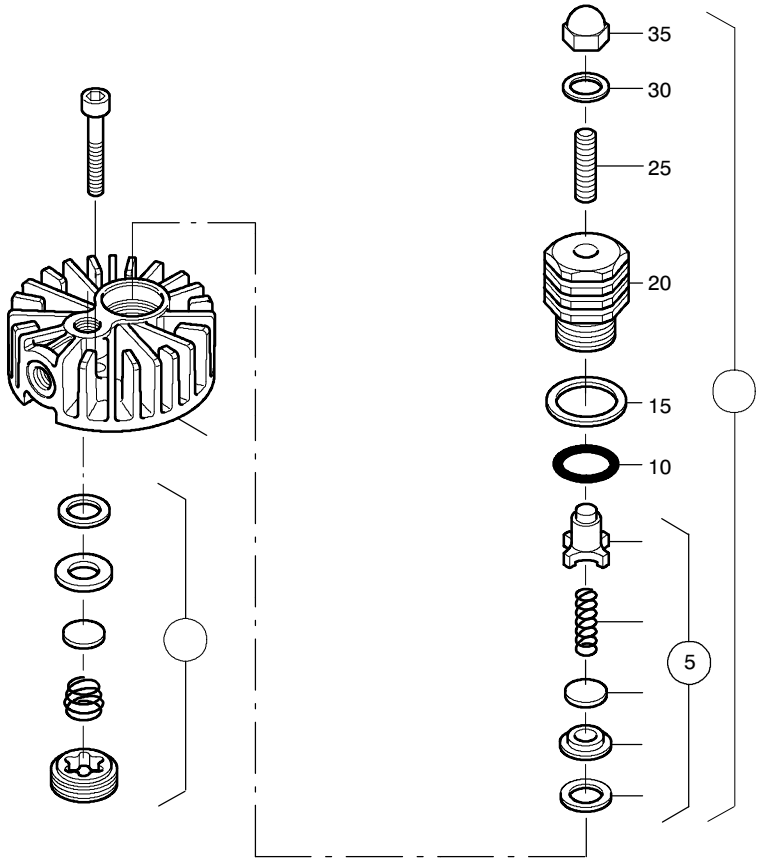

014582/09/97

Ersatzteilsätze
Spare parts sets
Kits de pièces dét.

Baugruppe 014582 Druckventil kpl.
Assembly 014582 Pressure valve assy.
Assemblage 014582 Soupape de pression cpl.

A2.8- 10b

Klasse/ Class/ Classe			Pos.	Bestell-Nr. Part No. No. de cde.	Anz. Qty. Qté.	Benennung	Designation	Dénomination	Gew. Weight Poids (kg)	Abmessungen Dimensions Dimensions
a	b	c								
		2	**5**	**012835**	**1**	**Druckventileinsatz kpl.**	**pressure valve insert**	**garniture de soupape**		
		2	10	N3521	1	O-Ring	o-ring	joint torique		21.82x3.53
			15	14332	1	Tellerfeder	spring washer	ressort a disque		
			20	14124	1	Verschraubung	coupling	raccord		
			25	71064	1	Gewindestift	stud	goujon filete		
		2	30	N380	1	Dichtung	gasket	joint	1 g	DIN 7603 ; C8x14x1.5
			35	N84	1	Sechskant-Hutmutter	acorn nut	ecrou a chapeau	11 g	DIN 1587 ; M8 ; 6

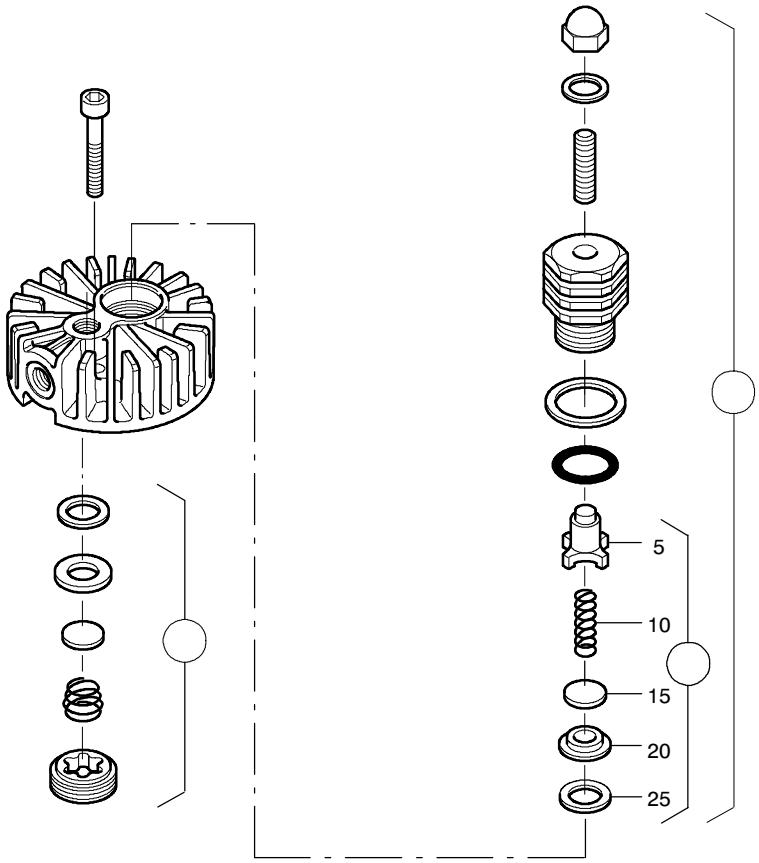

012835/09/97

Ersatzteilsätze
Spare parts sets
Kits de pièces dét.

Baugruppe 012835 Druckventileinsatz kpl.
Assembly 012835 Pressure valve insert assy
Assemblage 012835 Garniture de soupape de pression cpl.

A2.8- 10c

Klasse/ Class/ Classe			Pos.	Bestell-Nr. Part No. No. de cde.	Anz. Qty. Qté.	Benennung	Designation	Dénomination	Gew. Weight Poids (kg)	Abmessungen Dimensions Dimensions
a	b	c								
			5		1	Druckventileinsatz				
			10	1026	1	Ventilfeder	valve spring	ressort du clapet		
			15		1	Ventilplatte	valve plate	plate de soupape		
			20		1	Ventilsitz				
			25	240	1	Dichtung	gasket	joint	5 g	

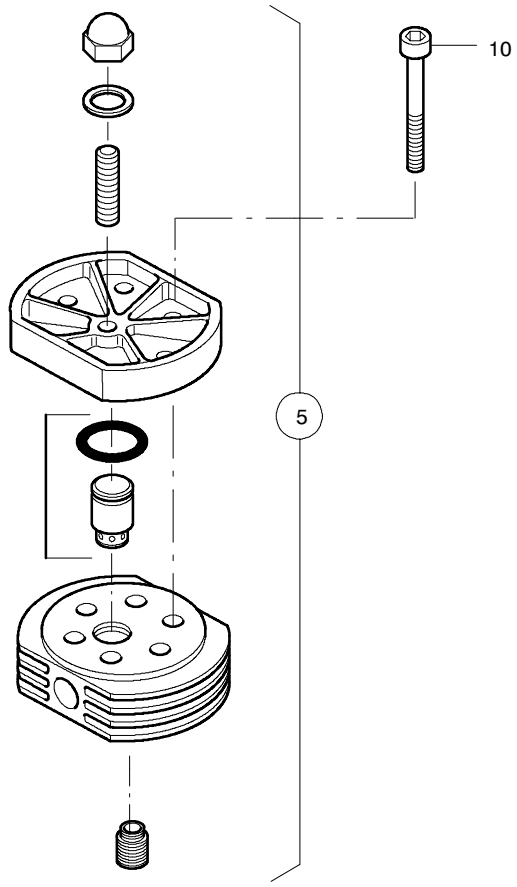

068793/09/97

Ersatzteilsätze
Spare parts sets
Kits de pièces dét.

Baugruppe 069793 Ventilkopf
Assembly 069793 Valve head
Assemblage 069793 Culasse

A2.8- 11

Klasse/ Class/ Classe			Pos.	Bestell-Nr. Part No. No. de cde.	Anz. Qty. Qté.	Benennung	Designation	Dénomination	Gew. Weight Poids (kg)	Abmessungen Dimensions Dimensions
a	b	c								
			5	**073628**	**1**	**Ventilkopf**				
			10	N150	6	Zylinderschraube	allen screw	vis a six pans creux	29 g	DIN 912 ; M8x60 ; 8.8

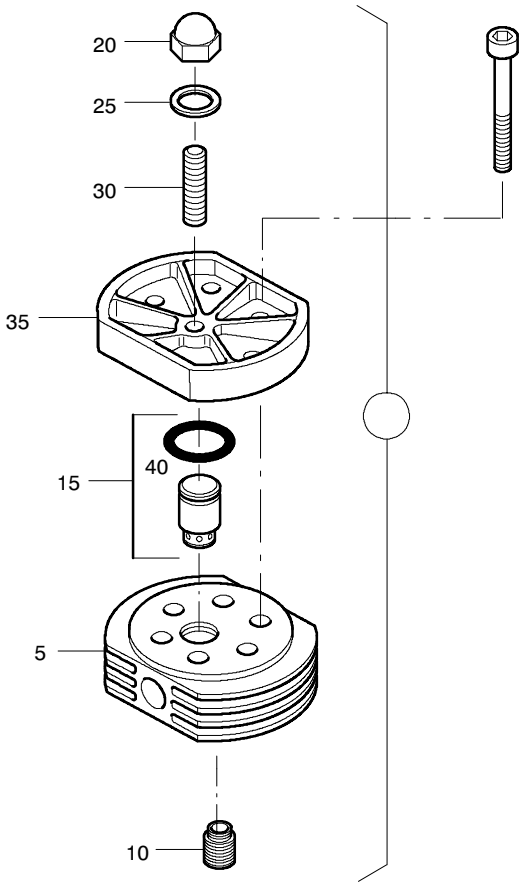

073628/09/97

Ersatzteilsätze
Spare parts sets
Kits de pièces dét.

Baugruppe 073628 Ventilkopf
Assembly 073628 Valve head
Assemblage 073628 Culasse

A2.8- 11a

Klasse/ Class/ Classe			Pos.	Bestell-Nr. Part No. No. de cde.	Anz. Qty. Qté.	Benennung	Designation	Dénomination	Gew. Weight Poids (kg)	Abmessungen Dimensions Dimensions
a	b	c								
			5	14117	1	Ventilkopf	valve head	tete de soupape		
	X		10	07790	1	Saugventil	suction valve	clapet d'aspiration		
	X		15	014121	1	Druckventil	pressure valve	soupape de pression	,021	
			20	N3623	1	Sechskant-Hutmutter	acorn nut	ecrou a chapeau	10 g	DIN 917 ; M8x1 ; 6
X			25	N3625	1	Dichtung	gasket	joint	1 g	DIN 7603 ; A8x14x1.5
	X		30	71065	1	Gewindestift	stud	goujon filete		
			35	14118	1	Ventilkopf-Deckel	valve head cover	chapeau de tete soupape		
			40	N2789	1	O-Ring	o-ring	joint torique		15.6x1.78

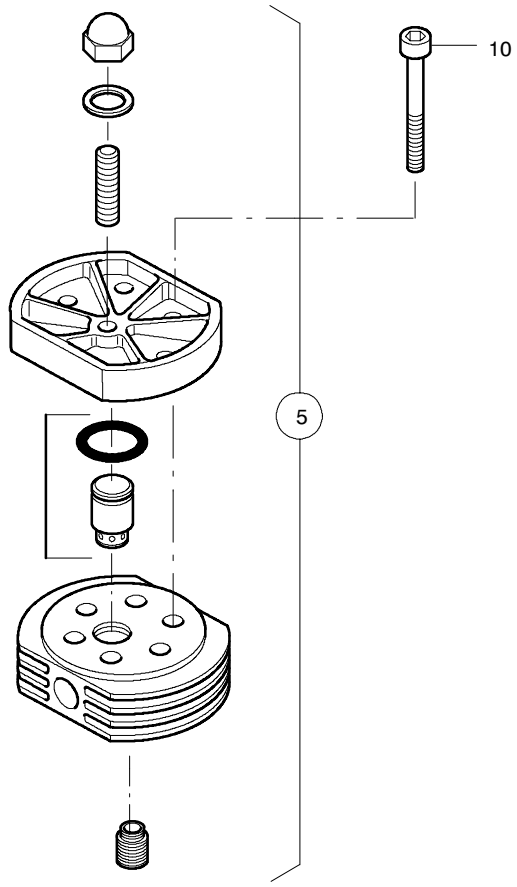

072198/09/97

Ersatzteilsätze
Spare parts sets
Kits de pièces dét.

Baugruppe 072198 Ventilkopf
Assembly 072198 Valve head
Assemblage 072198 Culasse

A2.8- 12

Klasse/ Class/ Classe			Pos.	Bestell-Nr. Part No. No. de cde.	Anz. Qty. Qté.	Benennung	Designation	Dénomination	Gew. Weight Poids (kg)	Abmessungen Dimensions Dimensions
a	b	c								
			5	**073629**	**1**	**Ventilkopf**				
			10	N150	6	Zylinderschraube	allen screw	vis a six pans creux	29 g	DIN 912 ; M8x60 ; 8.8

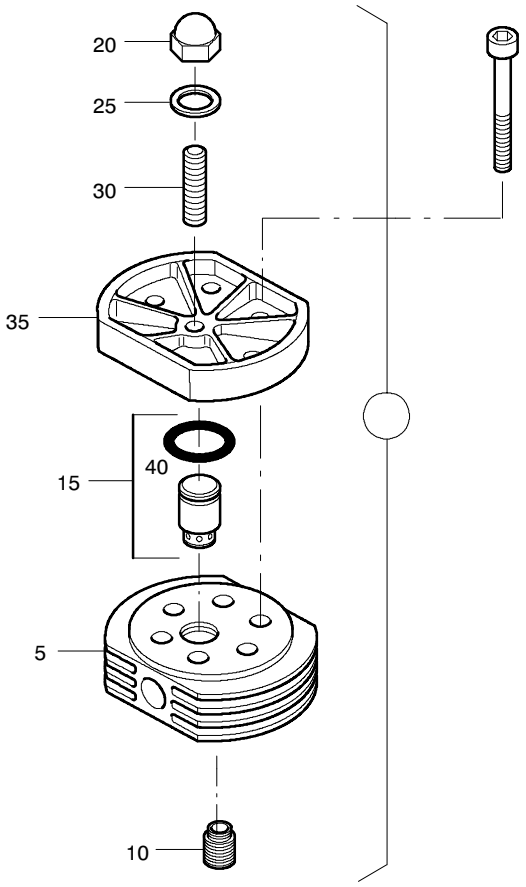

073629/09/97

Ersatzteilsätze
Spare parts sets
Kits de pièces dét.

Baugruppe 073629 Ventilkopf
Assembly 073629 Valve head
Assemblage 073629 Culasse

A2.8- 12a

Klasse/ Class/ Classe			Pos.	Bestell-Nr. Part No. No. de cde.	Anz. Qty. Qté.	Benennung	Designation	Dénomination	Gew. Weight Poids (kg)	Abmessungen Dimensions Dimensions
a	b	c								
			5	65191	1	Ventilkopf	valve head	tete de soupape		
	X		10	07790	1	Saugventil	suction valve	clapet d'aspiration		
	X		15	014121	1	Druckventil	pressure valve	soupape de pression	,021	
			20	N3623	1	Sechskant-Hutmutter	acorn nut	ecrou a chapeau	10 g	DIN 917 ; M8x1 ; 6
X			25	N3625	1	Dichtung	gasket	joint	1 g	DIN 7603 ; A8x14x1.5
	X		30	71065	1	Gewindestift	stud	goujon filete		
			35	14118	1	Ventilkopf-Deckel	valve head cover	chapeau de tete soupape		
			40	N2789	1	O-Ring	o-ring	joint torique		15.6x1.78

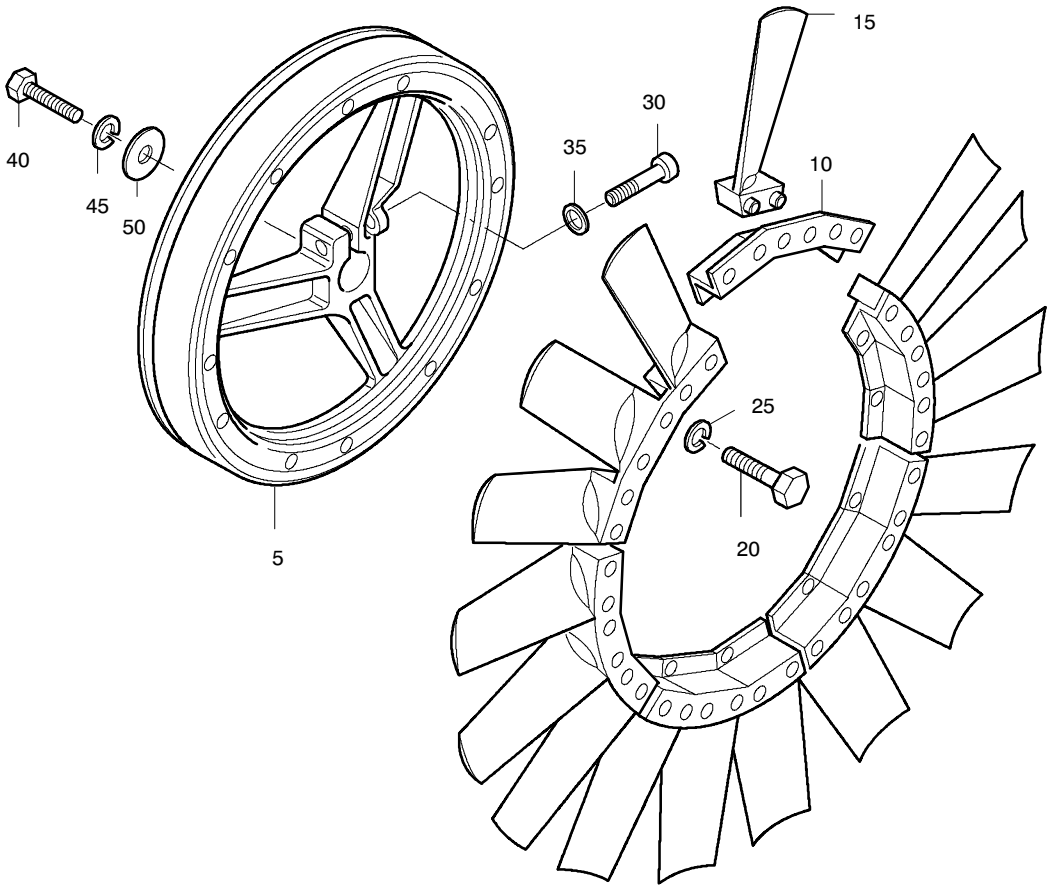

014879/09/97

Ersatzteilsätze
Spare parts sets
Kits de pièces dét.

Baugruppe 014879 Schwungrad-Riementrieb
Assembly 014879 Flywheel assy
Assemblage 014879 Roue volant cpl.

A2.8- 13

Klasse/ Class/ Classe			Pos.	Bestell-Nr. Part No. No. de cde.	Anz. Qty. Qté.	Benennung	Designation	Dénomination	Gew. Weight Poids (kg)	Abmessungen Dimensions Dimensions
a	b	c								
			5	14832	1	Keilriemenscheibe	v-belt pulley	poulie a gorge	8 kg	
			10	55425	6	Ventilatorflügelträger	fan wheel wing support	support des ailettes		
			15	55459	18	Lüfterschaufel	fan wheel blade	ailette de roue		linksdrehend
			20	N53	12	Sechskantschraube	hexagon screw	vis hexagonale	5 g	DIN 933 ; M6x16 ; 8.8
			25	N100	12	Federring	spring washer	anneau-ressort	1 g	DIN 127 ; A 6
			30	N1310	1	Zylinderschraube	allen screw	vis a six pans creux	52 g	DIN 912 ; M10x70 ; 8.8
			35	N176	1	Federring	spring washer	anneau-ressort	2 g	DIN 127 ; A 10
			40	N198	1	Sechskantschraube	hexagon screw	vis hexagonale	12 g	DIN 933 ; M8x20 ; 8.8
			45	N108	1	Federring	spring washer	anneau-ressort	1 g	DIN 127 ; A 8
			50	1492	1	Deckscheibe	washer	rondelle		

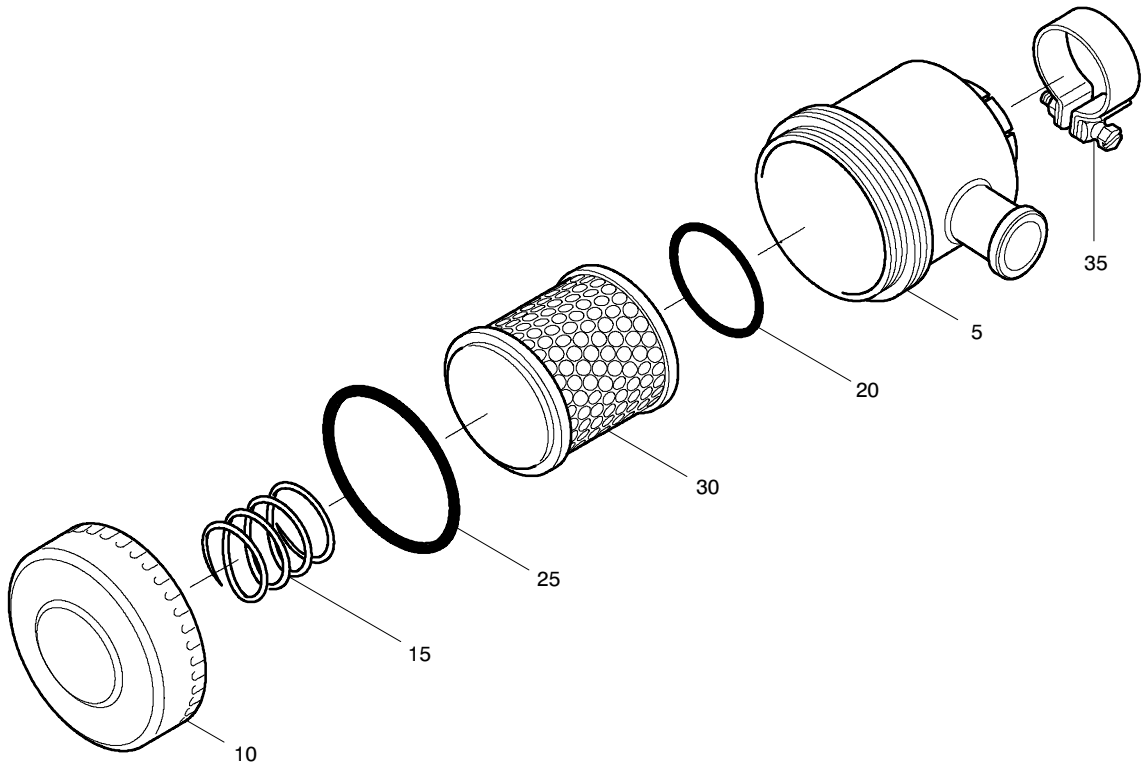

013758/09/97

Ersatzteilsätze
Spare parts sets
Kits de pièces dét.

Baugruppe 013758 Ansaugfilter
Assembly 013758 Intake filter
Assemblage 013758 Filtre d'aspiration

A2.8- 14

Klasse/ Class/ Classe			Pos.	Bestell-Nr. Part No. No. de cde.	Anz. Qty. Qté.	Benennung	Designation	Dénomination	Gew. Weight Poids (kg)	Abmessungen Dimensions Dimensions
a	b	c								
			5	12770	1	Ansaugfilter-Gehäuse	intake filter housing	boitier de filtre d'aspir.		
			10	12771	1	Ansaugfilter-Deckel	suction filter cover	couvercle de filtre		
			15	10528	1	Druckfeder	pressure spring	ressort de pression		
X			20	13757	1	O-Ring	o-ring	joint torique		35x5
X			25	N4451	1	O-Ring	o-ring	joint torique		75x3
X			30	N70	1	Filtereinsatz	filter insert	element filtrant		C 711/1
			35	N3374	1	Schelle	clamp	collier		

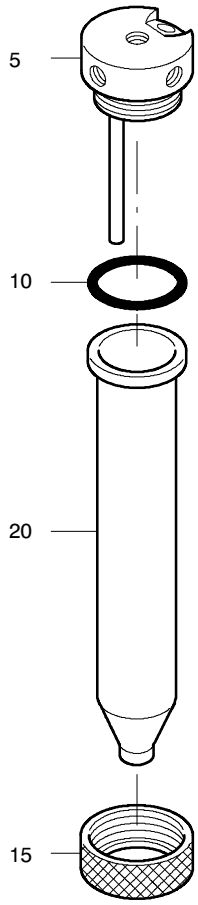

064632/09/97

Ersatzteilsätze
Spare parts sets
Kits de pièces dét.

Baugruppe 064632 Zwischenabscheider
Assembly 064632 Intermediate separator
Assemblage 064632 Séparateur intermédiaire

A2.8- 15

Klasse/ Class/ Classe			Pos.	Bestell-Nr. Part No. No. de cde.	Anz. Qty. Qté.	Benennung	Designation	Dénomination	Gew. Weight Poids (kg)	Abmessungen Dimensions Dimensions
a	b	c								
			5	064631	1	Filterkopf kpl.	filter head	tete de filtre		
			10	N3556	1	O-Ring	o-ring	joint torique		45x2
			15	13937	1	Überwurfmutter	screw cap	ecrou-chapeau	,125	
			20	14150	1	Behältergehäuse	filter housing	corps de filtre		

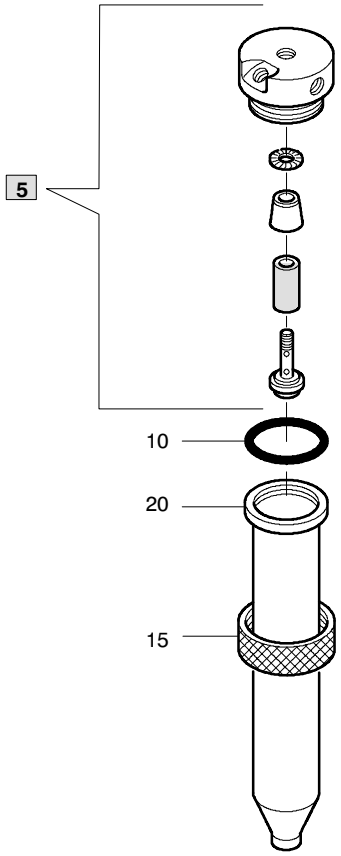

06761 2/09/97

Ersatzteilsätze
Spare parts sets
Kits de pièces dét.

Baugruppe 067612 Zwischenabscheider
Assembly 067612 Intermediate separator
Assemblage 067612 Séparateur intermédiaire

A2.8- 16

Klasse/ Class/ Classe			Pos.	Bestell-Nr. Part No. No. de cde.	Anz. Qty. Qté.	Benennung	Designation	Dénomination	Gew. Weight Poids (kg)	Abmessungen Dimensions Dimensions
a	b	c								
			5	**067611**	**1**	**Filterkopf kpl.**	**filter head**	**tete de filtre**		
X			10	N3556	1	O-Ring	o-ring	joint torique		45x2
			15	13937	1	Überwurfmutter	screw cap	ecrou-chapeau	,125	
			20	14150	1	Behältergehäuse	filter housing	corps de filtre		

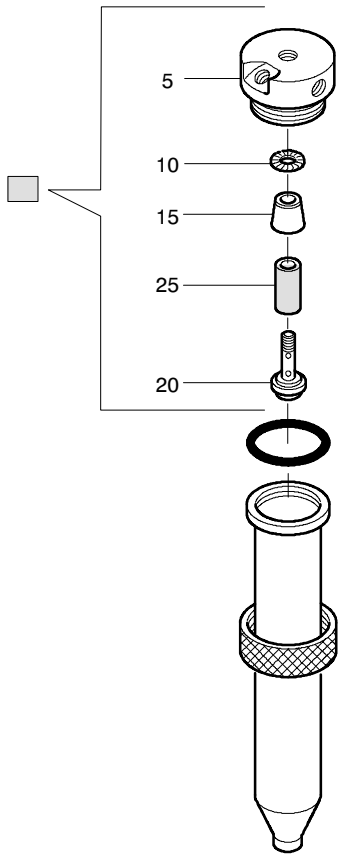

067611/09/97

Ersatzteilsätze
Spare parts sets
Kits de pièces dét.

Baugruppe 067611 Filterkopf kpl.
Assembly 067611 Filter head assy.
Assemblage 067611 Tête de filtre cpl.

A2.8- 16a

Klasse/ Class/ Classe			Pos.	Bestell-Nr. Part No. No. de cde.	Anz. Qty. Qté.	Benennung	Designation	Dénomination	Gew. Weight Poids (kg)	Abmessungen Dimensions Dimensions
a	b	c								
			5	13930	1	Filterkopf	filter head	tete de filtre		
			10	12784	1	Verteilerblech	distribution plate	tole de distribution		
			15	12785	1	Pralltrichter	baffle funnel	entonnoir de chicane		
			20	12786	1	Mittelschraube	center screw	vis centrale		
X			25	N2726	1	Filtereinsatz	filter insert	element filtrant		17x13x30

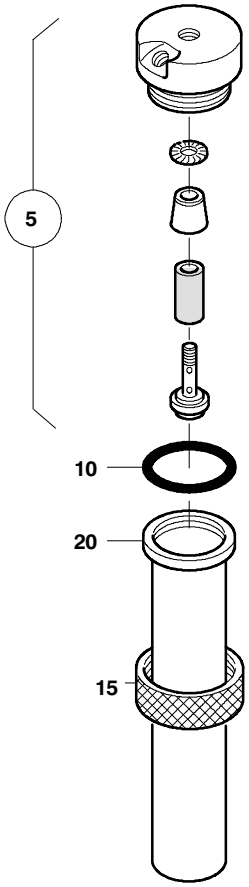

068260/09/97

Ersatzteilsätze
Spare parts sets
Kits de pièces dét.

Baugruppe 068260 Zwischenabscheider
Assembly 068260 Intermediate separator
Assemblage 068260 séparateur intermédiaire

A2.8- 17

Klasse/ Class/ Classe			Pos.	Bestell-Nr. Part No. No. de cde.	Anz. Qty. Qté.	Benennung	Designation	Dénomination	Gew. Weight Poids (kg)	Abmessungen Dimensions Dimensions
a	b	c								
			5	**069178**	**1**	**Filterkopf**				
X			10	N3556	1	O-Ring	o-ring	joint torique		45x2
			15	69173	1	Überwurfmutter				
			20	068257	1	Filterbehälter				PN200

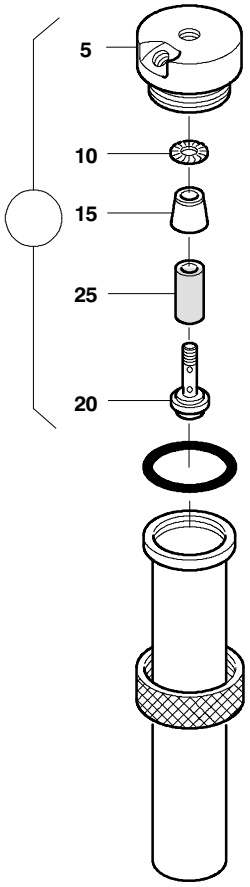

069178/09/97

Ersatzteilsätze
Spare parts sets
Kits de pièces dét.

Baugruppe 069178 Filterkopf
Assembly 069178 Filterhead
Assemblage 069178 Tête de filtre

A2.8- 17a

Klasse/ Class/ Classe			Pos.	Bestell-Nr. Part No. No. de cde.	Anz. Qty. Qté.	Benennung	Designation	Dénomination	Gew. Weight Poids (kg)	Abmessungen Dimensions Dimensions
a	b	c								
			5	69177	1	Filterkopf	filter head	tete de filtre		
			10	12784	1	Verteilerblech	distribution plate	tole de distribution		
			15	12785	1	Pralltrichter	baffle funnel	entonnoir de chicane		
			20	12786	1	Mittelschraube	center screw	vis centrale		
X			25	N2726	1	Filtereinsatz	filter insert	element filtrant		17x13x30

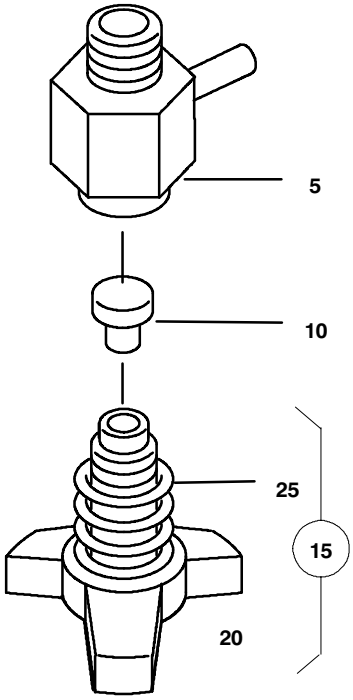

011430/09/97

Ersatzteilsätze
Spare parts sets
Kits de pièces dét.

Baugruppe 011430 Kondensat-Ablaßhahn
Assembly 011430 Condensate drain tap
Assemblage 011430 Robinet de purge du condensat

A2.8- 18

Klasse/ Class/ Classe			Pos.	Bestell-Nr. Part No. No. de cde.	Anz. Qty. Qté.	Benennung	Designation	Dénomination	Gew. Weight Poids (kg)	Abmessungen Dimensions Dimensions
a	b	c								
			5	068410	1	Ablaßhahnkörper, kpl.	drain valve body	corps de robinet de purge		
X			10	13283	1	Dichtung	gasket	joint		
			15	**055888**	**1**	**Knebelschraube kpl.**	**tommy screw assy.**	**vis a garret avec ressort**		
			20	11392	1	Knebelschraube	tommy screw	vis a garret		
			25	13284	1	Sicherungsfeder	locking spring	ressort d'arret		

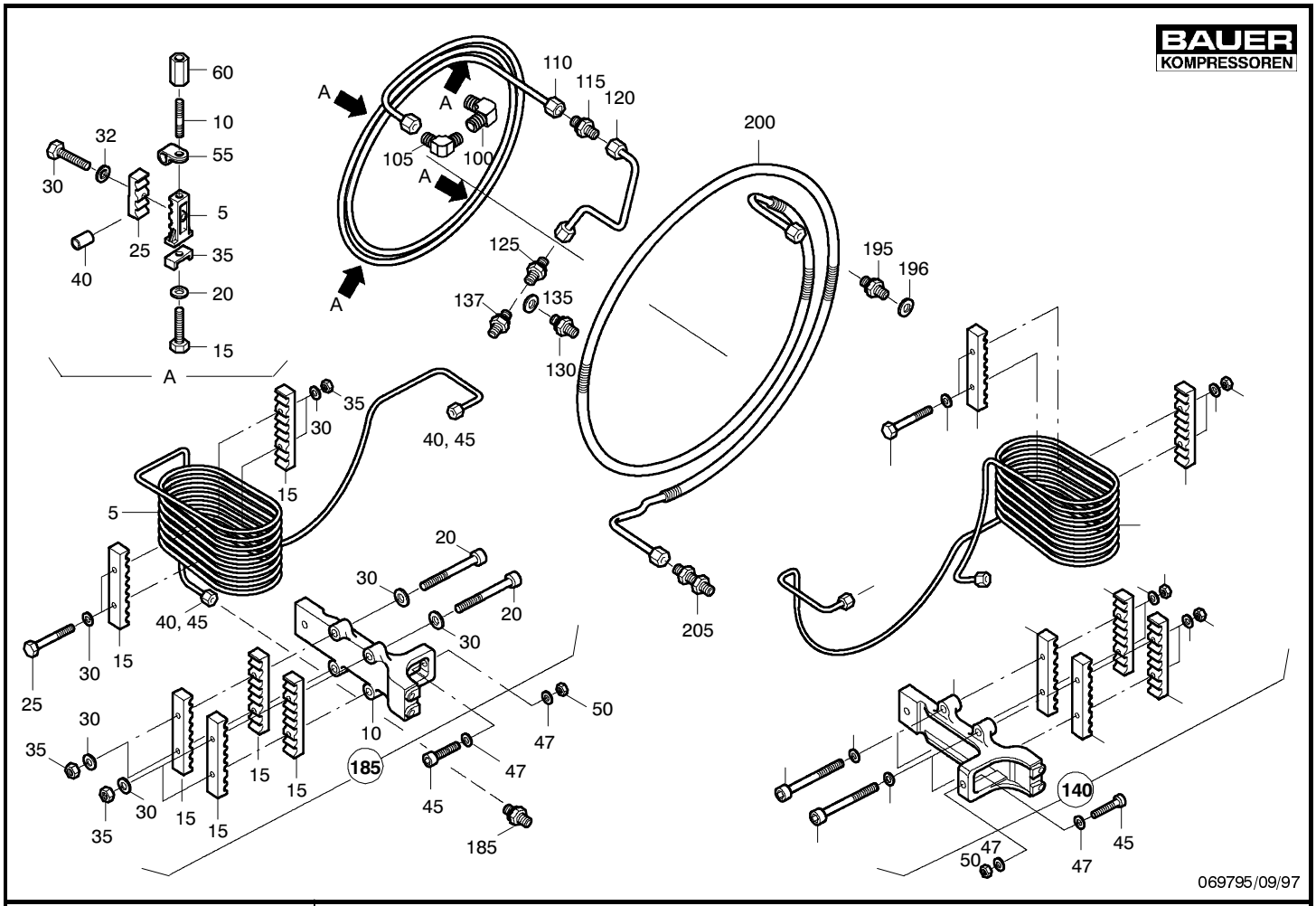

Ersatzteilsätze
Spare parts sets
Kits de pièces dét.

Baugruppe 069795 Kühlung
Assembly 069795 Cooling system
Assemblage 069795 Refroidissement

A2.8- 19

Klasse/ Class/ Classe			Pos.	Bestell-Nr. Part No. No. de cde.	Anz. Qty. Qté.	Benennung	Designation	Dénomination	Gew. Weight Poids (kg)	Abmessungen Dimensions Dimensions
a	b	c								
			5	63506	4	Abstandsstück	spacer piece	piece d'ecartement	,079	
			10	N56	4	Stiftschraube	stud	goujon filete		DIN 835 ; M8x20 ; 8.8
			15	N64	4	Sechskantschraube	hexagon screw	vis hexagonale	17 g	DIN 933 ; M8x35 ; 8.8
			20	N58	8	Scheibe, rund	washer	rondelle	2 g	DIN 125 ; B 8.4
			25	63507	4	Fixierung	fixing piece	piece de fixation		
			30	N756	4	Sechskantschraube	hexagon screw	vis hexagonale	19 g	DIN 933 ; M8x40 ; 8.8
			32	N58	4	Scheibe, rund	washer	rondelle	2 g	DIN 125 ; B 8.4
			35	14645	2	Zwischen-Stück	intermediate piece	piece intermediaire		
			40	14605	4	Fixierung	fixing tube	tuyau de fixation		
			45	N503	2	Zylinderschraube	allen screw	vis a six pans creux	19 g	DIN 912 ; M8x35 ; 8.8
			47	N58	4	Scheibe, rund	washer	rondelle	2 g	DIN 125 ; B 8.4
			50	N57	2	Sechskantmutter	hexagon nut	ecrou hexagonal	5 g	DIN 934 ; M8 ; 8
			55	14370	6	Rohrschelle	tube clamp	collier pour tuyaux		
			60	5290	4	Verlängerungsmutter	extension	allongement	,025	
			65	57070	2	Rohrschelle	tube clamp	collier pour tuyaux		Di=48
			70	N61	4	Zylinderschraube	allen screw	vis a six pans creux	15 g	DIN 912 ; M8x25 ; 8.8
			72	N58	4	Scheibe, rund	washer	rondelle	2 g	DIN 125 ; B 8.4
			75	055633	1	Ventilatorradschutz kpl.	fan screen	protection de ventilateur		
			75A	13995	4	Distanzstück	spacer	douille d'écartement		

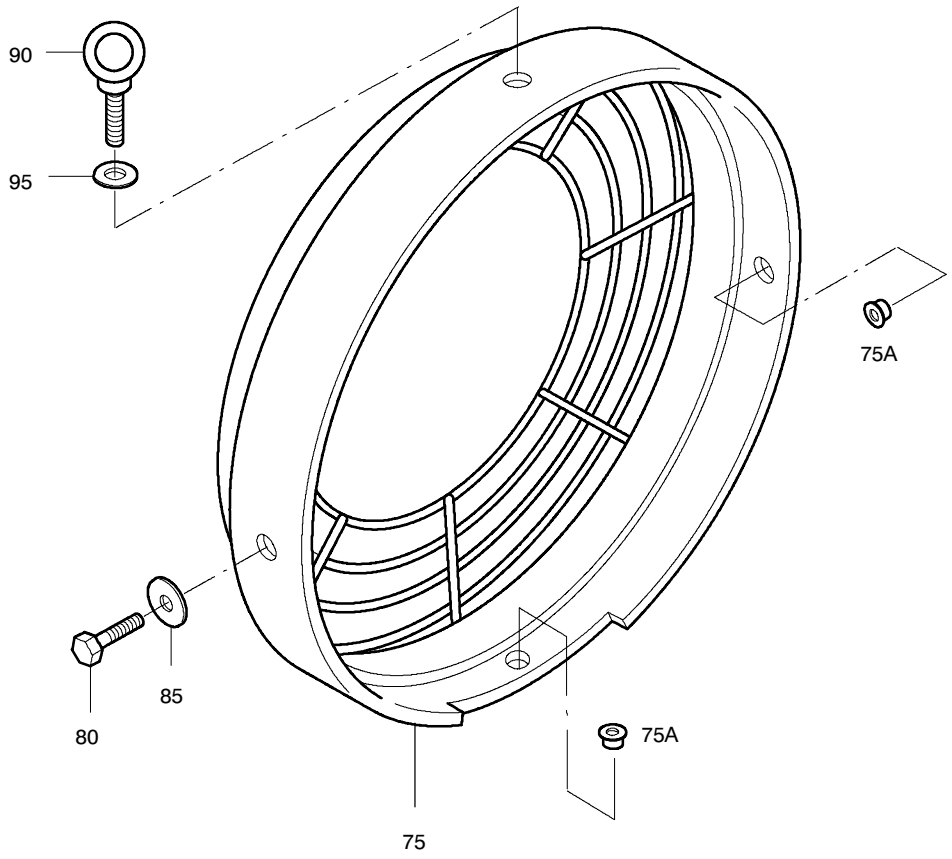

069795/09/97

Ersatzteilsätze
Spare parts sets
Kits de pièces dét.

Baugruppe 069795 Kühlung
Assembly 069795 Cooling system
Assemblage 069795 Refroidissement

A2.8- 19a

Klasse/ Class/ Classe			Pos.	Bestell-Nr. Part No. No. de cde.	Anz. Qty. Qté.	Benennung	Designation	Dénomination	Gew. Weight Poids (kg)	Abmessungen Dimensions Dimensions
a	b	c								
			80	N542	3	Sechskantschraube	hexagon screw	vis hexagonale	11 g	DIN 933 ; M8x16 ; 8.8
			85	N2460	3	Scheibe	washer	rondelle	7 g	DIN 9021 ; A 8.4
			90	N4466	1	Ringschraube	eye bolt	vis a oeil	60 g	DIN 580 ; M8 ; St
			95	N2862	1	Scheibe	washer	rondelle	9 g	DIN 7349 ; 8.4
			100	N20164	1	Winkel-Einschraubst.			88 g	WES 12 LRK
			105	N20044	1	Winkel-Einschraubst.			84 g	WES 15 LRK
			110	069891	1	Zwischenkühler kpl.	intercooler 1st stage	refroidisseur int. 1. etage		1.Stufe
			115	N20202	1	Gerader-Reduzierstutzen			38 g	GRS 15/12 PL
			120	069892	1	Verbindungsleitung kpl.	connecting tube cpl.	tube de connexion cpl.		v. Zwischenk. 1.St z. V
			125	N20341	1	Gerader-Einschraubst			29 g	XGE 12 LLR
			130	N20201	1	Gerader-Einschraubst			23 g	GES 10 LR
			135	N1316	1	Dichtung	gasket	joint	1 g	A13x20x2 ; Cu
			137	N20341	1	Gerader-Einschraubst			29 g	XGE 12 LLR
			140	**064357**	**1**	**Zwischenkühler kpl.**	**intercooler**	**refroidisseur intermed.**		**2.Stufe**
			142	N20341	1	Gerader-Einschraubst			29 g	XGE 12 LLR
			145	N20237	1	Gerader-Einschraubst			14 g	GES 6 LR-WD
			150	N4530	1	Verschlußstopfen	plug	bouchon	10 g	VS 6 L/S

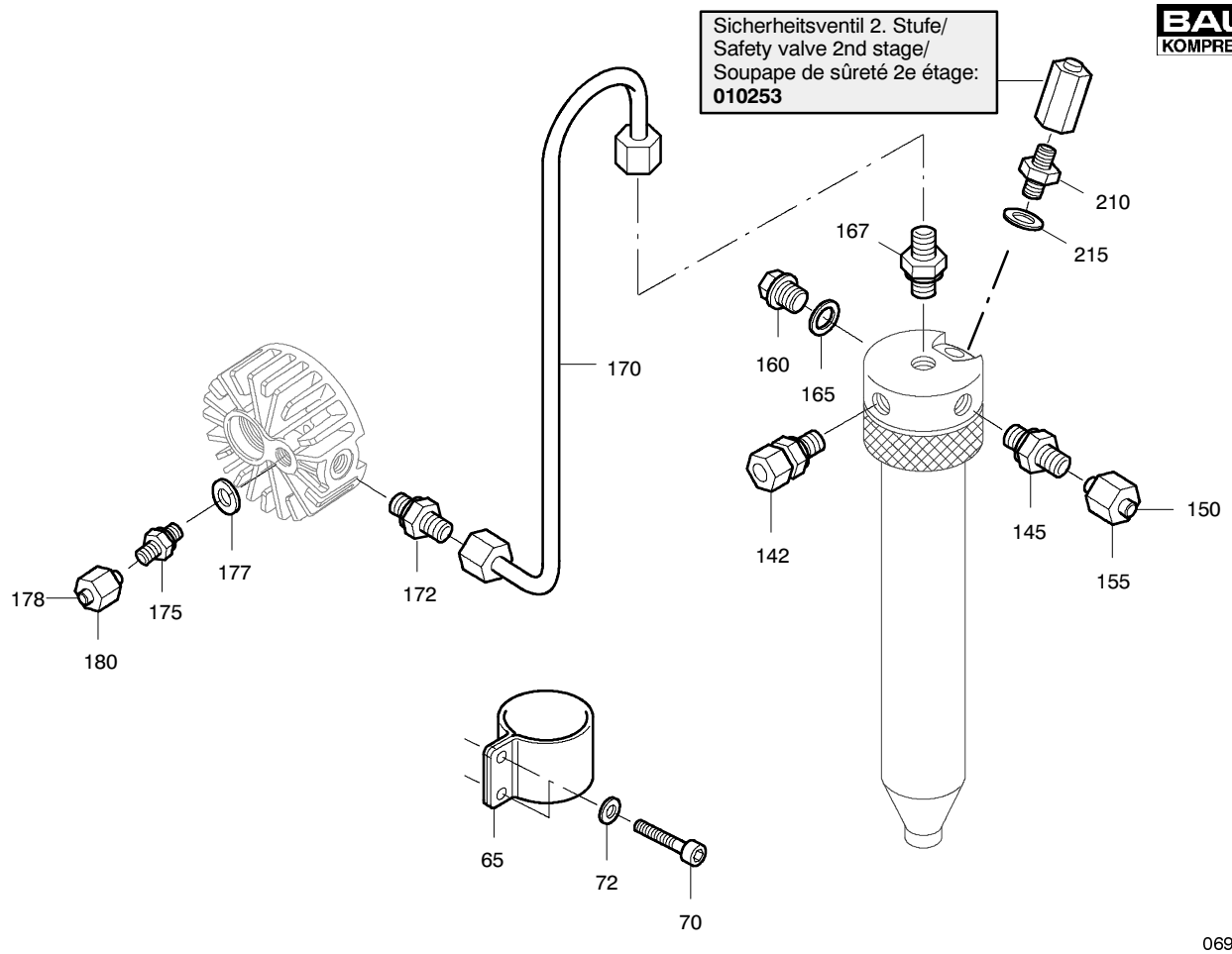

069795/09/97

Ersatzteilsätze
Spare parts sets
Kits de pièces dét.

Baugruppe 069795 Kühlung
Assembly 069795 Cooling system
Assemblage 069795 Refroidissement

A2.8- 19b

Klasse/ Class/ Classe a	b	c	Pos.	Bestell-Nr. Part No. No. de cde.	Anz. Qty. Qté.	Benennung	Designation	Dénomination	Gew. Weight Poids (kg)	Abmessungen Dimensions Dimensions
			155	N7430	1	Überwurfmutter	screw cap	ecrou-chapeau	9 g	M 6 L
			160	N3459	1	Verschlußschraube	plug	bouchon filete	12 g	DIN 910 ; G 1/8A ; St ;
			165	N4051	1	Dichtung	gasket	joint	1 g	DIN 7603 ; A10x15x1
			167	N20341	1	Gerader-Einschraubst			29 g	XGE 12 LLR
			170	069893	1	Verbindungsleitung kpl.	connection tube cpl.	tube de connexion cpl.		v. Zwischenf. 2.St z. V
			172	N20341	1	Gerader-Einschraubst			29 g	XGE 12 LLR
			175	N20195	1	Gerader-Einschraubst	male connector		33 g	GES 6 SR
			177	N1316	1	Dichtung	gasket	joint	1 g	A13x20x2 ; Cu
			178	N4530	1	Verschlußstopfen	plug	bouchon	10 g	VS 6 L/S
			180	N3610	1	Überwurfmutter	screw cap	ecrou-chapeau	15 g	M 6 S
			182	N20341	1	Gerader-Einschraubst			29 g	XGE 12 LLR
			185	**064359**	**1**	**Zwischenkühler kpl.**	**intercooler**	**refroidisseur intermed.**		**3.Stufe**
			186	N20341	1	Gerader-Einschraubst			29 g	XGE 12 LLR
			187	N20237	1	Gerader-Einschraubst			14 g	GES 6 LR-WD
			188	N4530	1	Verschlußstopfen	plug	bouchon	10 g	VS 6 L/S
			189	N7430	1	Überwurfmutter	screw cap	ecrou-chapeau	9 g	M 6 L
			190	N3459	1	Verschlußschraube	plug	bouchon filete	12 g	DIN 910 ; G 1/8A ; St
			191	N4051	1	Dichtung	gasket	joint	1 g	DIN 7603 ; A10x15x1 ;
			192	N20341	1	Gerader-Einschraubst			29 g	XGE 12 LLR
			193	069894	1	Verbindungsleitung kpl.	connecting tube cpl.	tube de connexion		v. Zwischenf. 3.St z. V
			194	N20341	1	Gerader-Einschraubst			29 g	XGE 12 LLR
			195	N20209	1	Gerader-Einschraubst			35 g	GES 8 SR
			196	N1316	1	Dichtung	gasket	joint	1 g	A13x20x2 ; Cu
			200	069895	1	Nachkühler kpl.	aftercooler cpl.	refroidisseur posterieur		

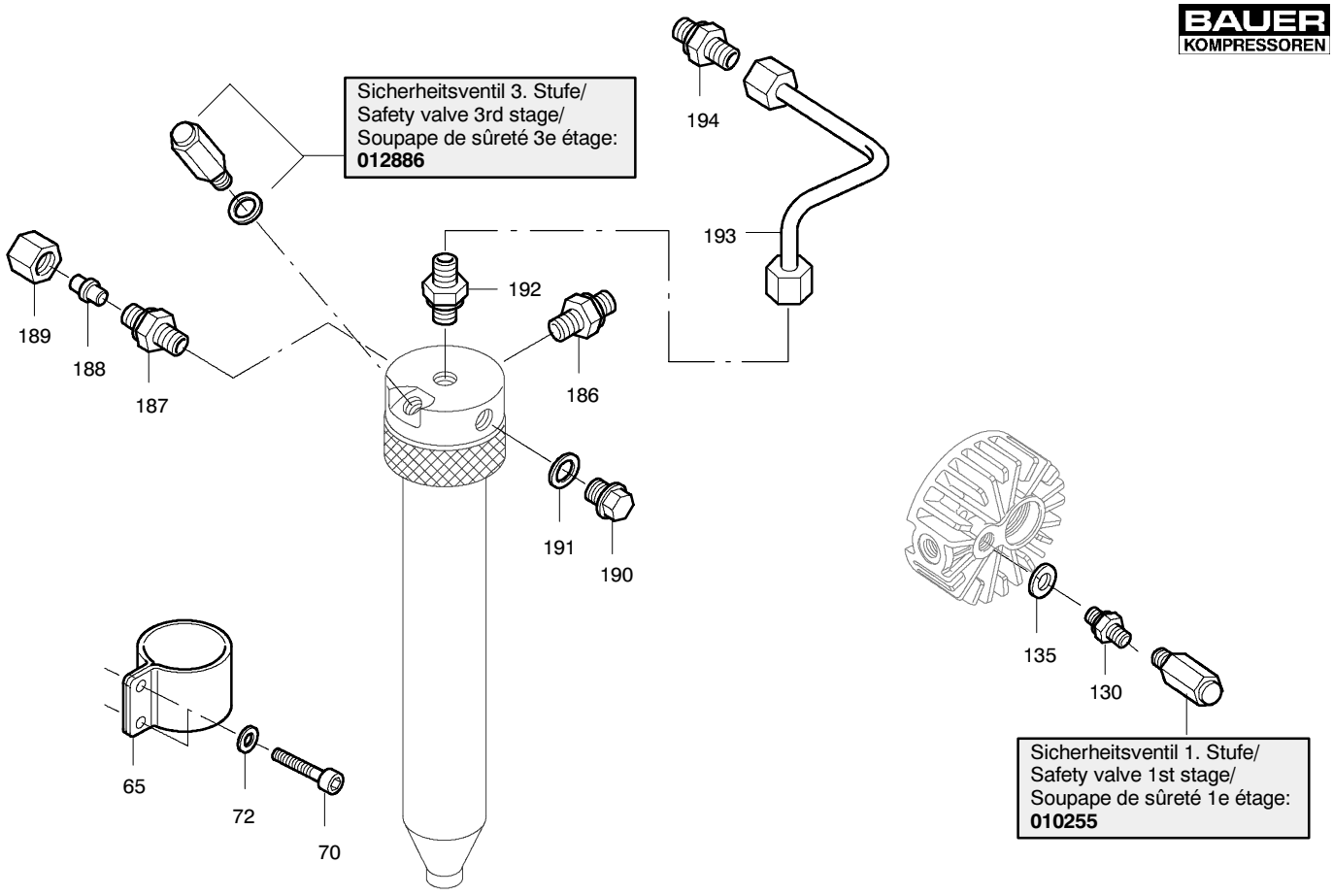

069795/09/97

Ersatzteilsätze
Spare parts sets
Kits de pièces dét.

Baugruppe 069795 Kühlung
Assembly 069795 Cooling system
Assemblage 069795 Refroidissement

A2.8- 19c

Klasse/ Class/ Classe			Pos.	Bestell-Nr. Part No. No. de cde.	Anz. Qty. Qté.	Benennung	Designation	Dénomination	Gew. Weight Poids (kg)	Abmessungen Dimensions Dimensions
a	b	c								
			205	N20183	1	Gerader-Schottstutzen	connector	raccord	84 g	GSS 8 S
			210	N20188	1	Gerader-Einschraubst	male connector	raccord droit male	37 g	GES 8 L/R3/8
			215	4479	1	Dichtung	gasket	joint		8x14x2.5

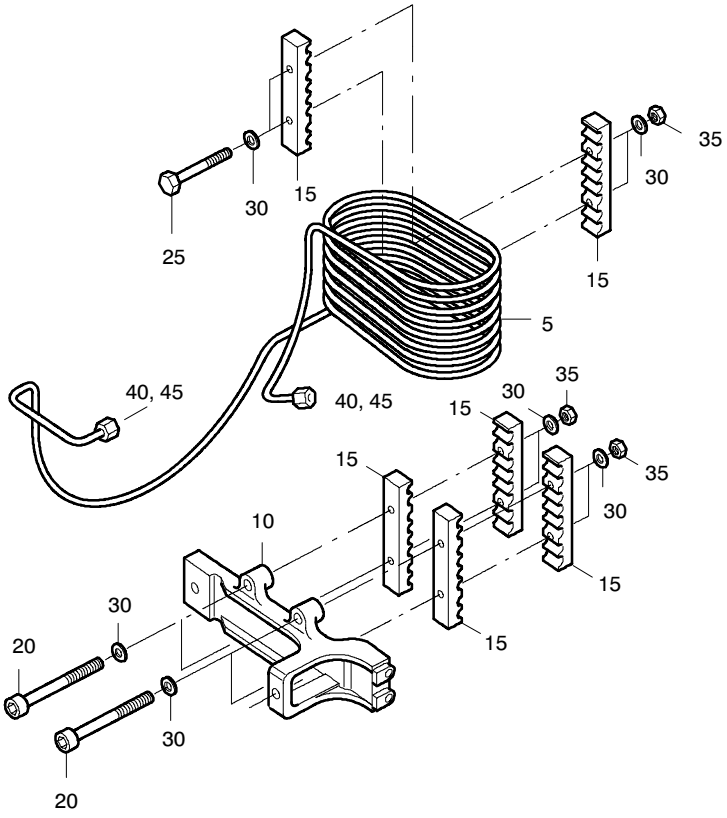

064357/09/97

Ersatzteilsätze
Spare parts sets
Kits de pièces dét.

Baugruppe 064357 Zwischenkühler kpl.
Assembly 064357 Inter-cooler assy
Assemblage 064357 Refroidisseur intermédiaire cpl.

A2.8- 20

Klasse/ Class/ Classe			Pos.	Bestell-Nr. Part No. No. de cde.	Anz. Qty. Qté.	Benennung	Designation	Dénomination	Gew. Weight Poids (kg)	Abmessungen Dimensions Dimensions
a	b	c								
			5	*	1	Kühlrohrspirale	cooling tube spiral			
			10	64165	1	Halterung	mounting	fixation	,45 kg	
			15	62773	6	Fixierung	fixing for cooler	fixation de refroidisseur	,06 kg	f.Kühlrohr
			20	N781	4	Zylinderschraube	allen screw	vis a six pans creux	15 g	DIN 912;M6x60;8.8
			25	N3498	2	Sechskantschraube	hexagon screw	vis hexagonale	10 g	DIN 933;M6x45;8.8
			30	N102	12	Scheibe	washer	rondelle	1 g	DIN 125;B 6.4;St;A3A
			35	N1042	6	Selbstsichernde Mutter	hexagon nut self-locking	ecrou hexagonal auto-fr.		DIN 980;N M6;8;A3A
			40	N3584	2	Schneidring	cutting ring	anneau de matrice	1,6 g	D 12 LL;1.4571
			45	N3585	2	Überwurfmutter	screw cap	ecrou-chapeau	12 g	M12LL; M16x1

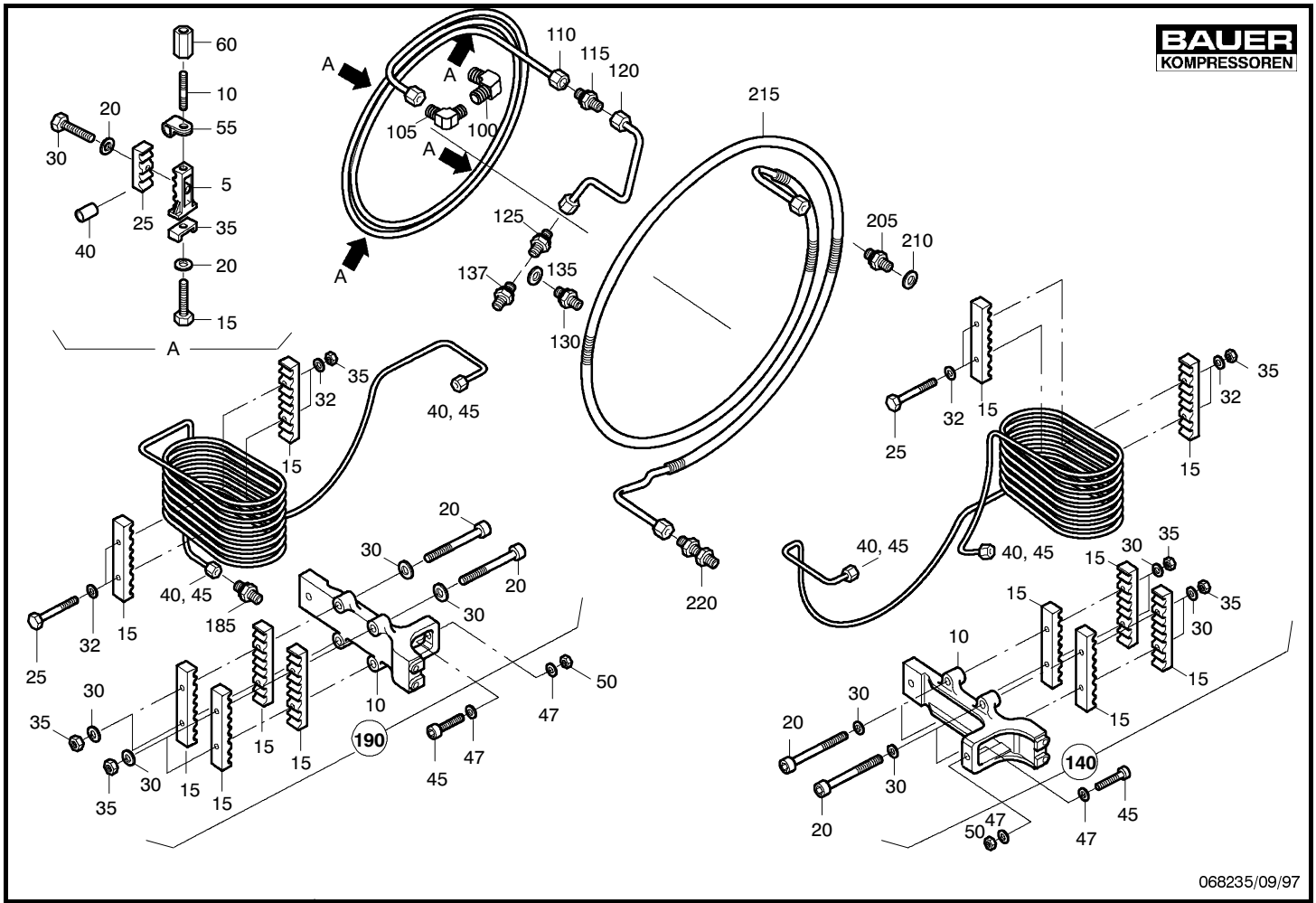

Ersatzteilsätze
Spare parts sets
Kits de pièces dét.

Baugruppe 068235 Kühlung
Assembly 068235 Cooling system
Assemblage 068235 Refroidissement

A2.8- 21

Klasse/ Class/ Classe			Pos.	Bestell-Nr. Part No. No. de cde.	Anz. Qty. Qté.	Benennung	Designation	Dénomination	Gew. Weight Poids (kg)	Abmessungen Dimensions Dimensions
a	b	c								
			5	63506	4	Abstandsstück	spacer piece	piece d'ecartement	,079	
			10	N56	4	Stiftschraube	stud	goujon filete		DIN 835 ; M8x20 ; 8.8
			15	N64	4	Sechskantschraube	hexagon screw	vis hexagonale	17 g	DIN 933 ; M8x35 ; 8.8
			20	N58	8	Scheibe, rund	washer	rondelle	2 g	DIN 125 ; B 8.4
			25	63507	4	Fixierung	fixing piece	piece de fixation		
			30	N756	4	Sechskantschraube	hexagon screw	vis hexagonale	19 g	DIN 933 ; M8x40 ; 8.8
			32	N58	4	Scheibe, rund	washer	rondelle	2 g	DIN 125 ; B 8.4
			35	14645	2	Zwischen-Stück	intermediate piece	piece intermediaire		
			40	14605	4	Fixierung	fixing tube	tuyau de fixation		
			45	N503	2	Zylinderschraube	allen screw	vis a six pans creux	19 g	DIN 912 ; M8x35 ; 8.8
			47	N58	4	Scheibe, rund	washer	rondelle	2 g	DIN 125 ; B 8.4
			50	N57	2	Sechskantmutter	hexagon nut	ecrou hexagonal	5 g	DIN 934 ; M8 ; 8
			55	14370	6	Rohrschelle	tube clamp	collier pour tuyaux		
			60	5290	4	Verlängerungsmutter	extension	allongement	,025	
			65	57070	2	Rohrschelle	tube clamp	collier pour tuyaux		Di=48
			70	N61	4	Zylinderschraube	allen screw	vis a six pans creux	15 g	DIN 912 ; M8x25 ; 8.8
			72	N58	4	Scheibe, rund	washer	rondelle	2 g	DIN 125 ; B 8.4
			75	055633	1	Ventilatorradschutz kpl.	fan screen	protection de ventilateur		
			75A	13995	4	Distanzstück	spacer	douille d'écartement		
			80	N542	3	Sechskantschraube	hexagon screw	vis hexagonale	11 g	DIN 933 ; M8x16 ; 8.8
			85	N2460	3	Scheibe	washer	rondelle	7 g	DIN 9021 ; A 8.4
			90	N4466	1	Ringschraube	eye bolt	vis a oeil	60 g	DIN 580 ; M8 ; St
			95	N2862	1	Scheibe	washer	rondelle	9 g	DIN 7349 ; 8.4
			100	N20164	1	Winkel-Einschraubst.			88 g	WES 12 LRK

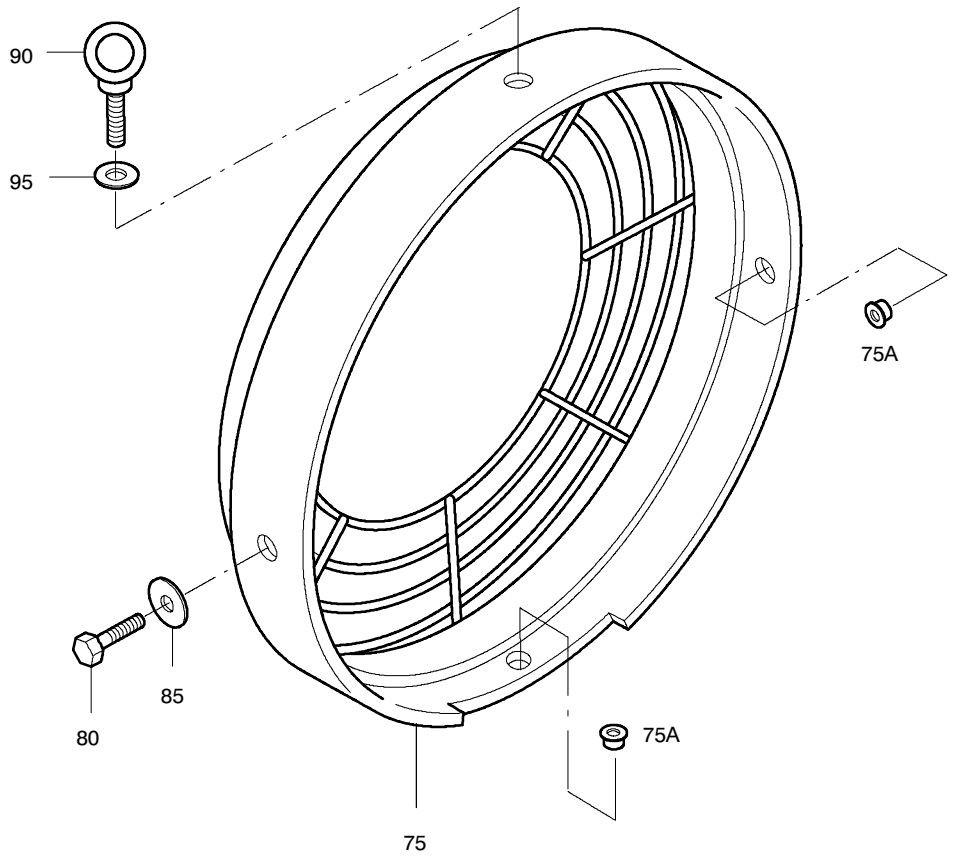

068235/07/98

Ersatzteilsätze
Spare parts sets
Kits de pièces dét.

Baugruppe 068235 Kühlung
Assembly 068235 Cooling system
Assemblage 068235 Refroidissement

A2.8- 21a

Klasse/ Class/ Classe a	b	c	Pos.	Bestell-Nr. Part No. No. de cde.	Anz. Qty. Qté.	Benennung	Designation	Dénomination	Gew. Weight Poids (kg)	Abmessungen Dimensions Dimensions
			105	N20044	1	Winkel-Einschraubst.			84 g	WES 15 LRK
			110	069891	1	Zwischenkühler kpl.	intercooler 1st stage	refroidisseur intermediaire		1.Stufe
			115	N20202	1	Gerader-Reduzierstutzen			38 g	GRS 15/12 PL
			120	069892	1	Verbindungsleitung kpl.	connecting tube cpl.	tube de connexion cpl.		v. Zwischenk. 1.St z. V
			125	N20341	1	Gerader-Einschraubst.			29 g	XGE 12 LLR
			130	N20201	1	Gerader-Einschraubst.			23 g	GES 10 LR
			135	N1316	1	Dichtung	gasket	joint	1 g	A13x20x2 ; Cu
			137	N20341	1	Gerader-Einschraubst.			29 g	XGE 12 LLR
			140	**064357**	**1**	**Zwischenkühler kpl.**	**intercooler**	**refroidisseur intermed.**		**2.Stufe**
			142	N20341	1	Gerader-Einschraubst.			29 g	XGE 12 LLR
			145	N20237	1	Gerader-Einschraubst			14 g	GES 6 LR-WD
			150	N4530	1	Verschlußstopfen	plug	bouchon	10 g	VS 6 L/S
			155	N7430	1	Überwurfmutter	screw cap	ecrou-chapeau	9 g	M 6 L
			160	N3459	1	Verschlußschraube	plug	bouchon filete	12 g	DIN 910 ; G 1/8A ; St
			165	N4051	1	Dichtung	gasket	joint	1 g	DIN 7603 ; A10x15x1
			167	N20341	1	Gerader-Einschraubst.			29 g	XGE 12 LLR
			170	069893	1	Verbindungsleitung kpl.	connection tube cpl.	tube de connexion cpl.		v. Zwischenf. 2.St z. V
			172	N20341	1	Gerader-Einschraubst.			29 g	XGE 12 LLR
			175	N20195	1	Gerader-Einschraubst.	male connector		33 g	GES 6 SR

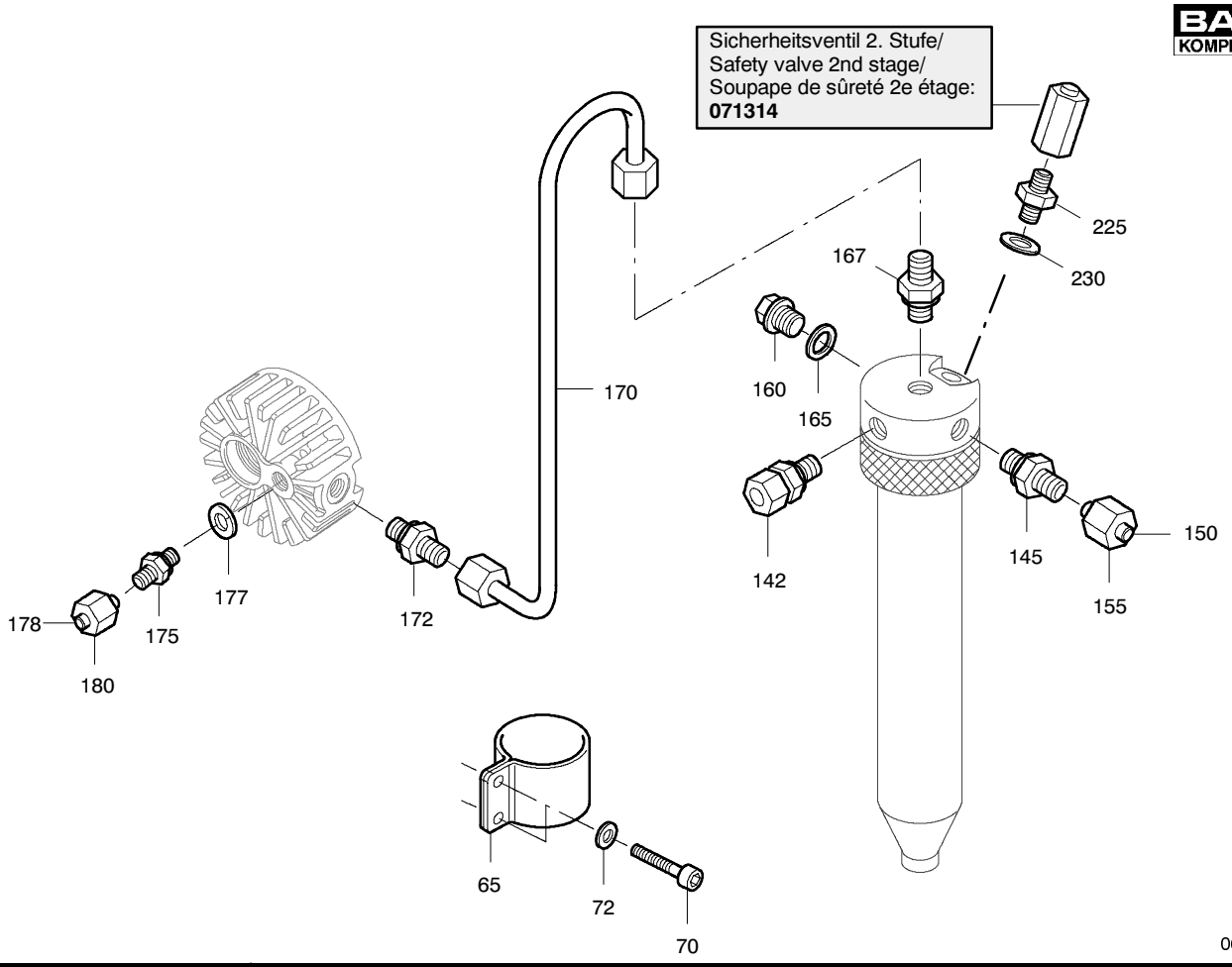

068235/07/98

Ersatzteilsätze
Spare parts sets
Kits de pièces dét.

Baugruppe 068235 Kühlung
Assembly 068235 Cooling system
Assemblage 068235 Refroidissement

A2.8- 21b

Klasse/ Class/ Classe			Pos.	Bestell-Nr. Part No. No. de cde.	Anz. Qty. Qté.	Benennung	Designation	Dénomination	Gew. Weight Poids (kg)	Abmessungen Dimensions Dimensions
a	b	c								
			177	N1316	1	Dichtung	gasket	joint	1 g	A13x20x2 ; Cu
			178	N4530	1	Verschlußstopfen	plug	bouchon	10 g	VS 6 L/S
			180	N3610	1	Überwurfmutter	screw cap	ecrou-chapeau	15 g	M 6 S
			185	N20059	1	Gerader-Einschraubst.			30 g	GES 12 L/R1/4
			190	**068413**	**1**	**Zwischenkühler kpl.**	**intercooler 3. stage**	**refroidisseur intermed.**		**3.Stufe**
			191	N20189	1	Gerader-Einschraubst.			27 g	GES 12 L/R 1/4K
			195	N20008	1	T-Einschraubstutzen			49 g	TES 6 LRK
			196	N4530	1	Verschlußstopfen	plug	bouchon	10 g	VS 6 L/S
			197	N7430	1	Überwurfmutter	screw cap	ecrou-chapeau	9 g	M 6 L
			198	N20189	1	Gerader-Einschraubst.			27 g	GES 12 L/R 1/4K
			200	071753	1	Verbindungsleitung kpl.	connection tube cpl.	tube de connexion cpl.		v. Zwischenf. 3.St z. V

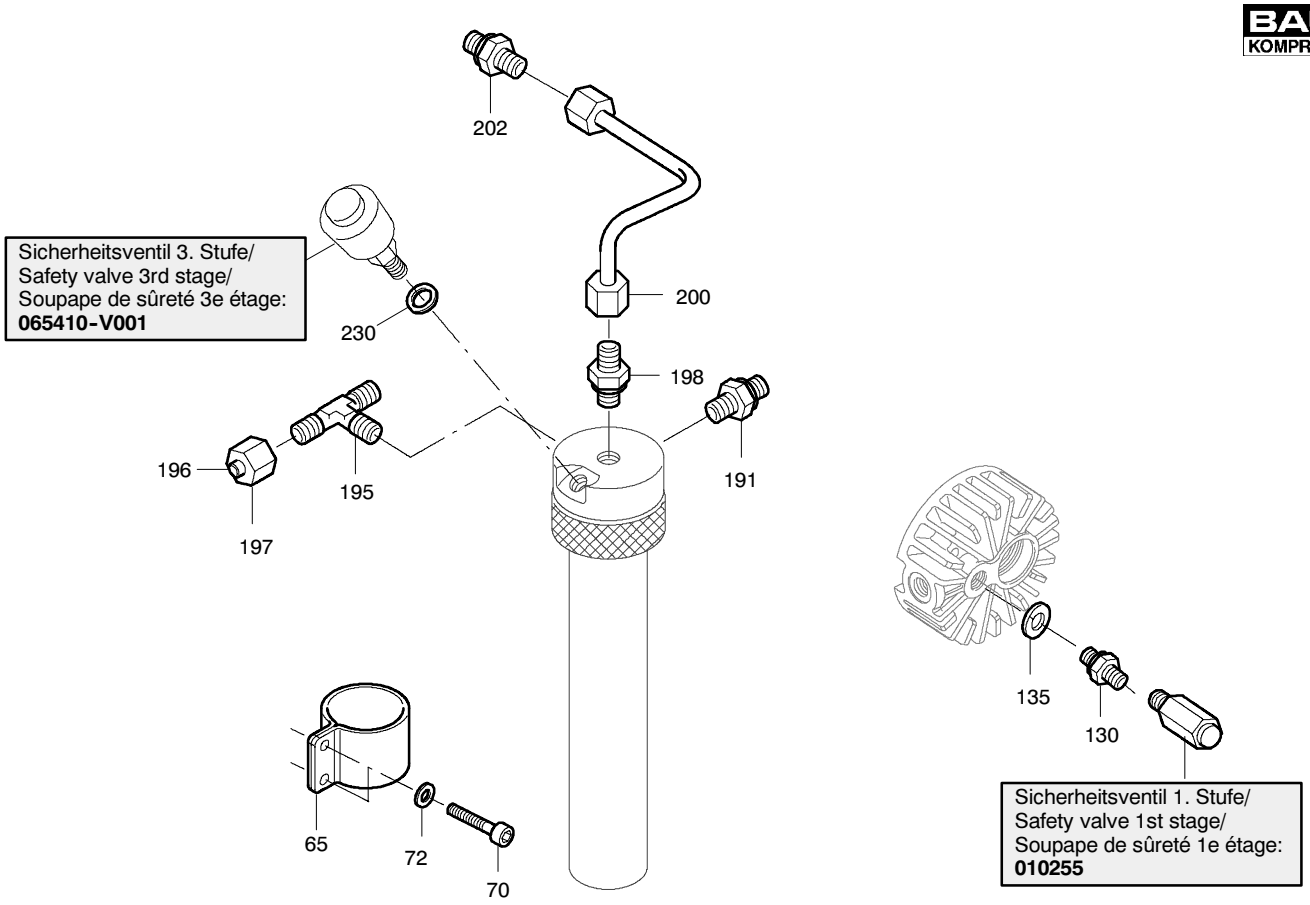

068235/07/98

Ersatzteilsätze
Spare parts sets
Kits de pièces dét.

Baugruppe 068235 Kühlung
Assembly 068235 Cooling system
Assemblage 068235 Refroidissement

A2.8- 21c

Klasse/ Class/ Classe			Pos.	Bestell-Nr. Part No. No. de cde.	Anz. Qty. Qté.	Benennung	Designation	Dénomination	Gew. Weight Poids (kg)	Abmessungen Dimensions Dimensions
a	b	c								
			202	N20189	1	Gerader-Einschraubst.			27 g	GES 12 L/R 1/4K
			205	71148	1	Rohrverschraubung				
			210	56983	1	Dichtung	gasket	joint		
			215	071754	1	Nachkühler kpl.	after cooler cpl.	refroidissuer cpl.		
			220	N20183	1	Gerader-Schottstutzen	connector	raccord	84 g	GSS 8 S
			225	N20188	1	Gerader-Einschraubst.	male connector	raccord droit male	37 g	GES 8 L/R3/8
			230	4479	1	Dichtung	gasket	joint		8x14x2.5

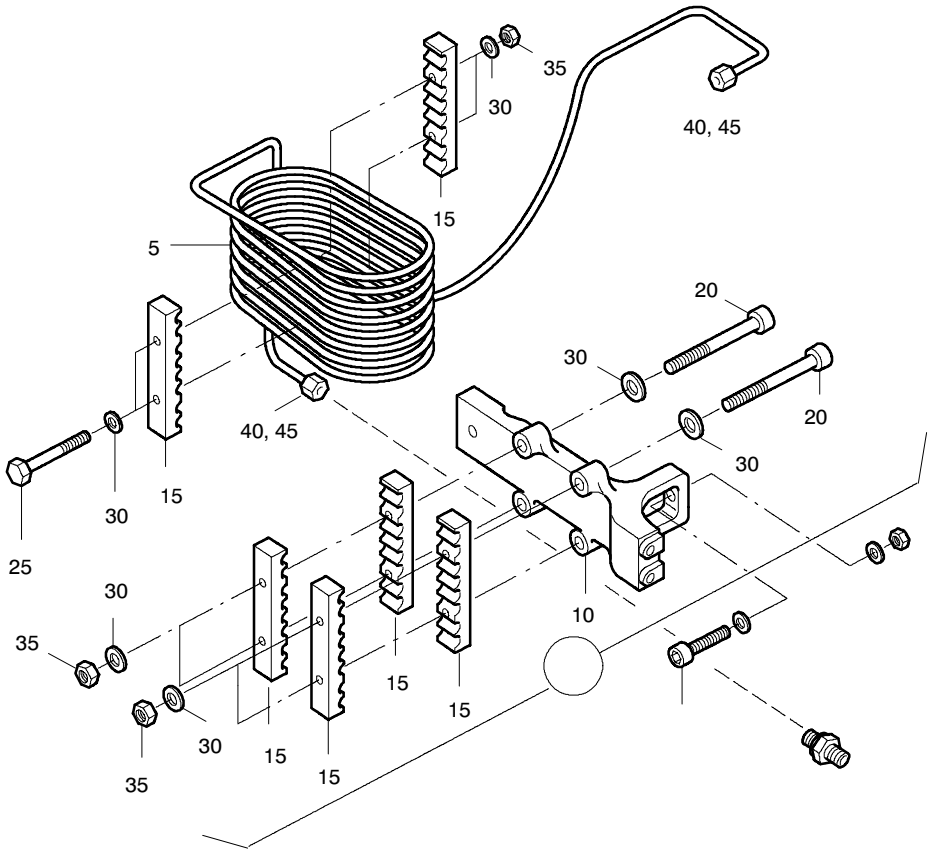

064359/09/97

Ersatzteilsätze
Spare parts sets
Kits de pièces dét.

Baugruppe 064359 Zwischenkühler kpl.
Assembly 064359 Inter-cooler assy
Assemblage 064359 Refroidisseur intermédiaire cpl.

A2.8- 22

Klasse/ Class/ Classe			Pos.	Bestell-Nr. Part No. No. de cde.	Anz. Qty. Qté.	Benennung	Designation	Dénomination	Gew. Weight Poids (kg)	Abmessungen Dimensions Dimensions
a	b	c								
			5		1	Kühlrohrspirale	cooling tube spiral			
			10	64165	1	Halterung	mounting	fixation	,45 kg	
			15	62773	6	Fixierung	fixing for cooler	fixation de refroidisseur	,06 kg	f. Kühlrohr
			20	N781	4	Zylinderschraube	allen screw	vis a six pans creux	15 g	DIN 912 ; M6x60 ; 8.8
			25	N3498	2	Sechskantschraube	hexagon screw	vis hexagonale	10 g	DIN 933 ; M6x45 ; 8.8
			30	N102	12	Scheibe, rund	washer	rondelle	1 g	DIN 125 ; B 6.4
			35	N1042	6	Selbstsichernde Mutter	hexagon nut self-locking	ecrou hexagonal auto-fr.		DIN 980 ; N M6 ; 8
			40	N3584	2	Schneidring	cutting ring	anneau de matrice	1,6 g	D 12 LL
			45	N3585	2	Überwurfmutter	screw cap	ecrou-chapeau	12 g	M 12 LL

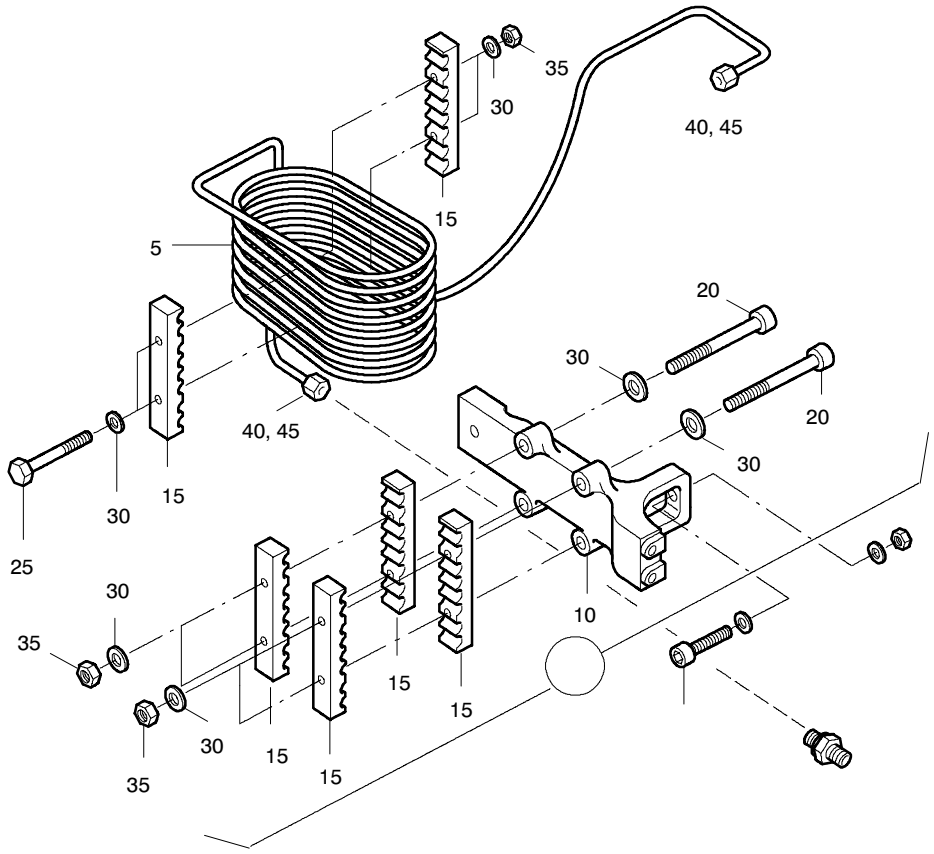

068413/09/97

Ersatzteilsätze
Spare parts sets
Kits de pièces dét.

Baugruppe 068413 Zwischenkühler kpl.
Assembly 068413 Inter-cooler assy
Assemblage 068413 Refroidisseur intermédiaire cpl.

A2.8- 23

Klasse/ Class/ Classe			Pos.	Bestell-Nr. Part No. No. de cde.	Anz. Qty. Qté.	Benennung	Designation	Dénomination	Gew. Weight Poids (kg)	Abmessungen Dimensions Dimensions
a	b	c								
			5		1	Kühlrohrspirale	cooling tube spiral			
			10	64165	1	Halterung	mounting	fixation	,45 kg	
			15	62773	6	Fixierung	fixing for cooler	fixation de refroidisseur	,06 kg	f. Kühlrohr
			20	N781	4	Zylinderschraube	allen screw	vis a six pans creux	15 g	DIN 912 ; M6x60 ; 8.8
			25	N3498	2	Sechskantschraube	hexagon screw	vis hexagonale	10 g	DIN 933 ; M6x45 ; 8.8
			30	N102	12	Scheibe, rund	washer	rondelle	1 g	DIN 125 ; B 6.4
			35	N1042	6	Selbstsichernde Mutter	hexagon nut self-locking	ecrou hexagonal auto-fr.		DIN 980 ; N M6 ; 8
			40	N7441	2	Schneidring	cutting ring	anneau de matrice	1,6 g	R 12 L/S
			45	N7433	2	Überwurfmutter	screw cap	ecrou-chapeau	12 g	M 12 L

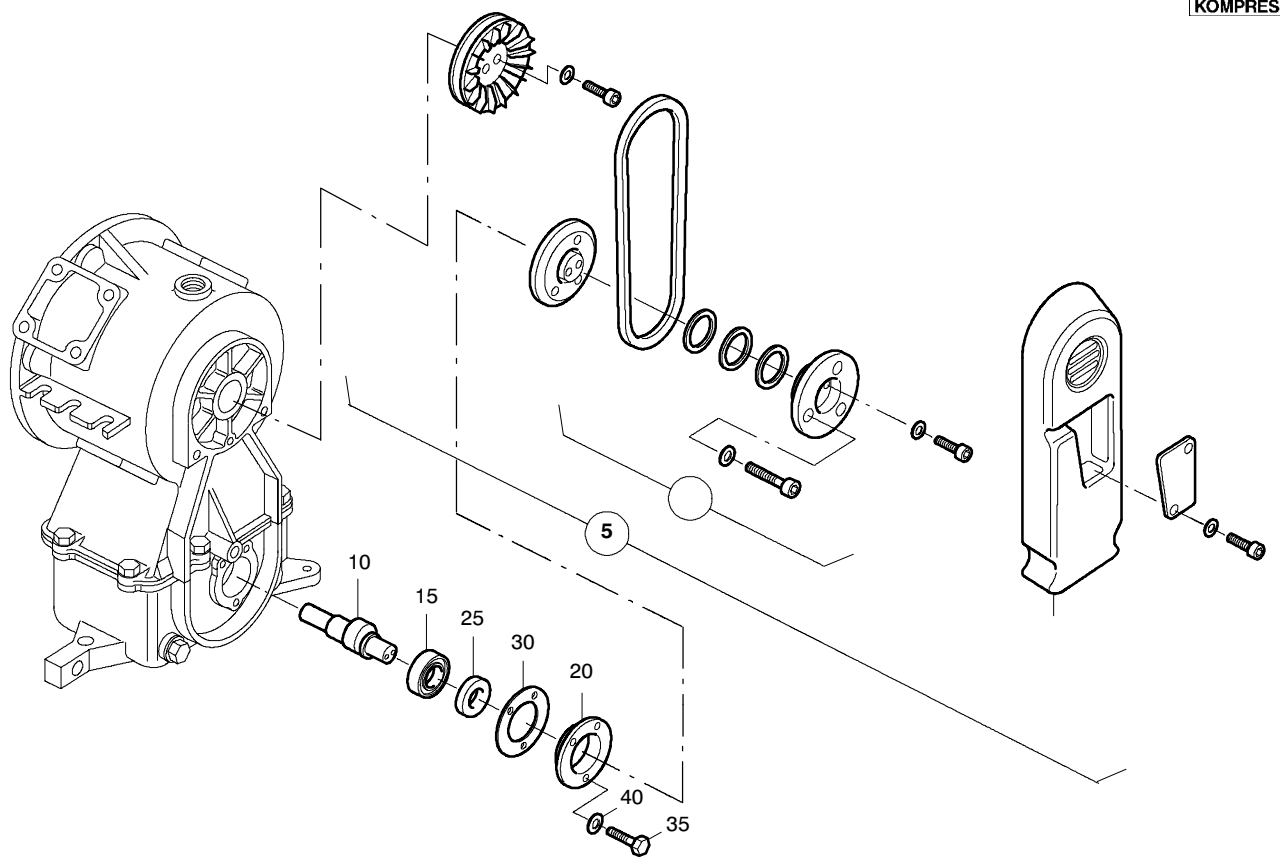

058309/09/97

Ersatzteilsätze
Spare parts sets
Kits de pièces dét.

Baugruppe 058309 Druckölschmierung
Assembly 058309 Lubrication system
Assemblage 058309 Lubrification

A2.8- 24

Klasse/ Class/ Classe			Pos.	Bestell-Nr. Part No. No. de cde.	Anz. Qty. Qté.	Benennung	Designation	Dénomination	Gew. Weight Poids (kg)	Abmessungen Dimensions Dimensions
a	b	c								
			5	**058307**	**1**	**Ölpumpenantrieb**	**oil pump drive**	**entrainement de pompe**		
			10	4704	1	Excenterwelle	eccentric shaft	arbre d'excentrique		
			15	N91	1	Rillenkugellager	grooved ball bearing	roulement rainure a billes	,11 kg	20x47x14
			20	5348	1	Abschlußdeckel	bearing cap	chapeau de palier		
			25	N86	1	Wellendichtring	shaft seal	garniture en anneau		DIN 3760 ; A20x40x7
			30	149	1	Dichtung	gasket	joint		Di=47.5 ; Da=74.6
			35	N53	3	Sechskantschraube	hexagon screw	vis hexagonale	5 g	DIN 933 ; M6x16 ; 8.8
			40	N102	3	Scheibe, rund	washer	rondelle	1 g	DIN 125 ; B 6.4

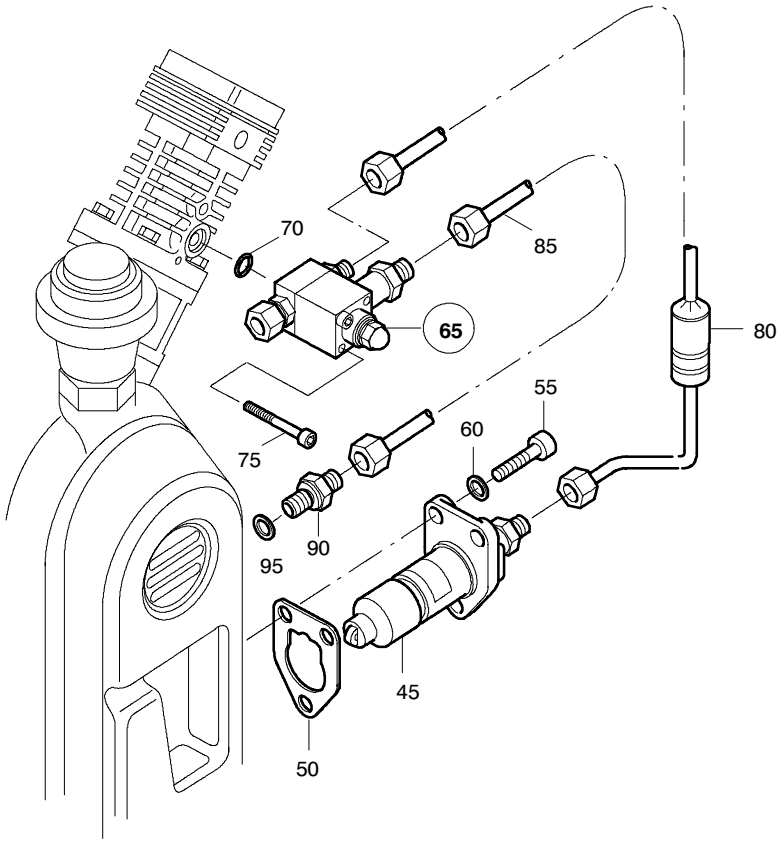

058309/09/97

Ersatzteilsätze
Spare parts sets
Kits de pièces dét.

Baugruppe 058309 Druckölschmierung
Assembly 058309 Lubrication system
Assemblage 058309 Lubrification

A2.8- 24a

Klasse/ Class/ Classe			Pos.	Bestell-Nr. Part No. No. de cde.	Anz. Qty. Qté.	Benennung	Designation	Dénomination	Gew. Weight Poids (kg)	Abmessungen Dimensions Dimensions
a	b	c								
			45	N83	1	Ölpumpe	oil pump	pompe a huile		Standard
				62285	1	Ölpumpe	oil pump	pompe a huile		- 22,5° pitch & roll
			50	2010	1	Dichtung	gasket	joint		
			55	N61	3	Zylinderschraube	allen screw	vis a six pans creux	15 g	DIN 912 ; M8x25 ; 8.8
			60	N58	3	Scheibe, rund	washer	rondelle	2 g	DIN 125 ; B 8.4
			65	**058138**	**1**	**Öldruckregulierventil**	**oil pr. regulating valve**	**soupape de regl. de pr.**		
			70	N7091	1	O-Ring	o-ring	joint torique		9.25x1.78
			75	N3407	2	Zylinderschraube	allen screw	vis a six pans creux		DIN 912 ; M6x80 ; 8.8
			80	069902	1	Verbindungsleitung kpl.	connecting pipe cpl.	tube de connextion cpl.		Druckölleitung
			85	069903	1	Verbindungsleitung kpl.	connection tube	tube de connexion		Ölrücklaufleitung
			90	N20002	1	Gerader-Einschraubst.	connector	raccord	14 g	GES 6 LR
			95	N4051	1	Dichtung	gasket	joint	1 g	DIN 7603 ; A10x15x1

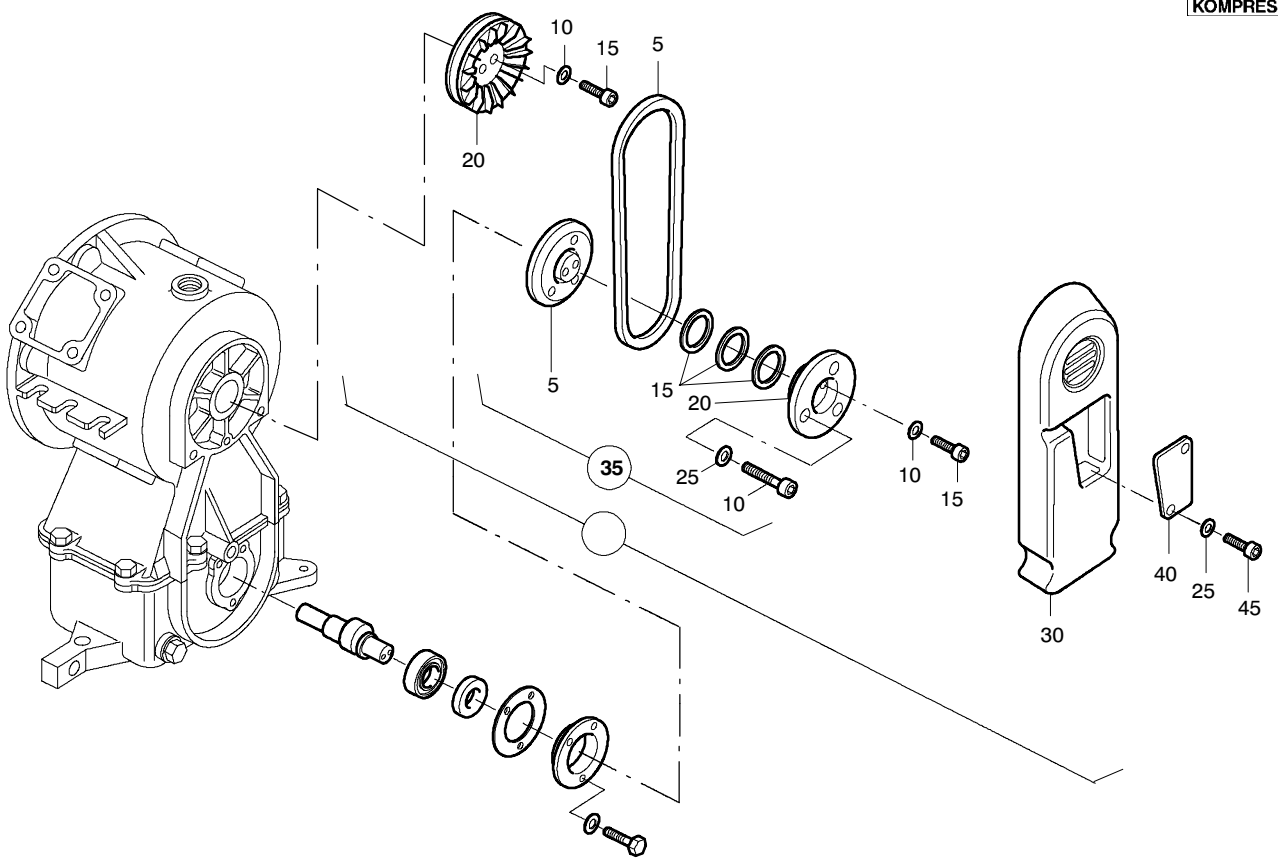

058307/09/97

Ersatzteilsätze
Spare parts sets
Kits de pièces dét.

Baugruppe 058307 Ölpumpenantrieb
Assembly 058307 Oil pump drive
Assemblage 058307 Entrainement du pompe à huile

A2.8- 24b

Klasse/ Class/ Classe			Pos.	Bestell-Nr. Part No. No. de cde.	Anz. Qty. Qté.	Benennung	Designation	Dénomination	Gew. Weight Poids (kg)	Abmessungen Dimensions Dimensions
a	b	c								
X			5	N4159	1	Keilriemen	v-belt	courroie trapezoidale	,052	SPZ ; Lw 737
			10	N1313	4	Federring	spring washer	anneau-ressort	1 g	DIN 7980 ; 6
			15	N210	4	Zylinderschraub	allen screw	vis a six pans creux	6 g	DIN 912 ; M6x20 ; 8.8
			20	56650	1	Keilriemenscheibe	v-belt pulley	poulie a gorge		
			25	N654	2	Federring	spring washer	anneau-ressort	1 g	DIN 7980 ; 8
			30	56649	1	Riemenschutzdeckel	belt guard cover	protecteur de courroie		
			35	**056651**	**1**	**Keilriemenscheibe**	**v-belt pulley**	**poulie a gorge**		
			40	56884	1	Distanz-Stück	spacer piece	piece d'ecartement	,07 kg	
			45	N61	2	Zylinderschraube	allen screw	vis a six pans creux	15 g	DIN 912 ; M8x25 ; 8.8

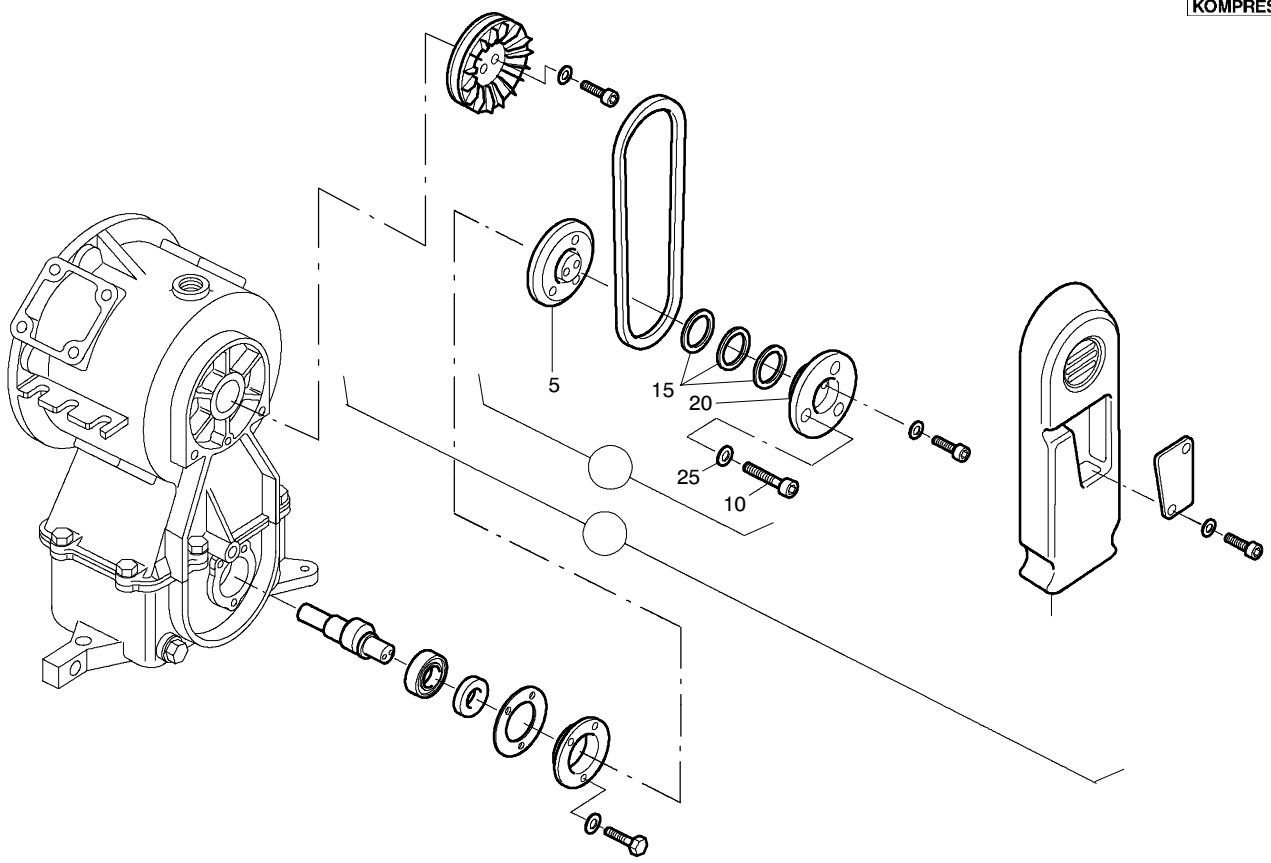

058309/09/97

Ersatzteilsätze
Spare parts sets
Kits de pièces dét.

Baugruppe 056651 Keilriemenscheibe
Assembly 056651 V-belt pulley
Assemblage 056651 Poulie à gorge

A2.8- 24c

Klasse/ Class/ Classe			Pos.	Bestell-Nr. Part No. No. de cde.	Anz. Qty. Qté.	Benennung	Designation	Dénomination	Gew. Weight Poids (kg)	Abmessungen Dimensions Dimensions
a	b	c								
			5	56652	1	Keilriemenscheibenteil	v-belt pulley part	partie de la poulie a gorge		
			10	N3158	3	Zylinderschraube	allen screw	vis a six pans creux	5 g	DIN 6912 ; M6x20
			15	N3159	3	Distanz-Scheibe	spacer disc	disque d'ecartement		44.5x25.2x0.5
			20	56653	1	Keilriemenscheibenteil	v-belt pulley part	partie de la poulie a gorge		
			25	N1313	3	Federring	spring washer	anneau-ressort	1 g	DIN 7980 ; 6

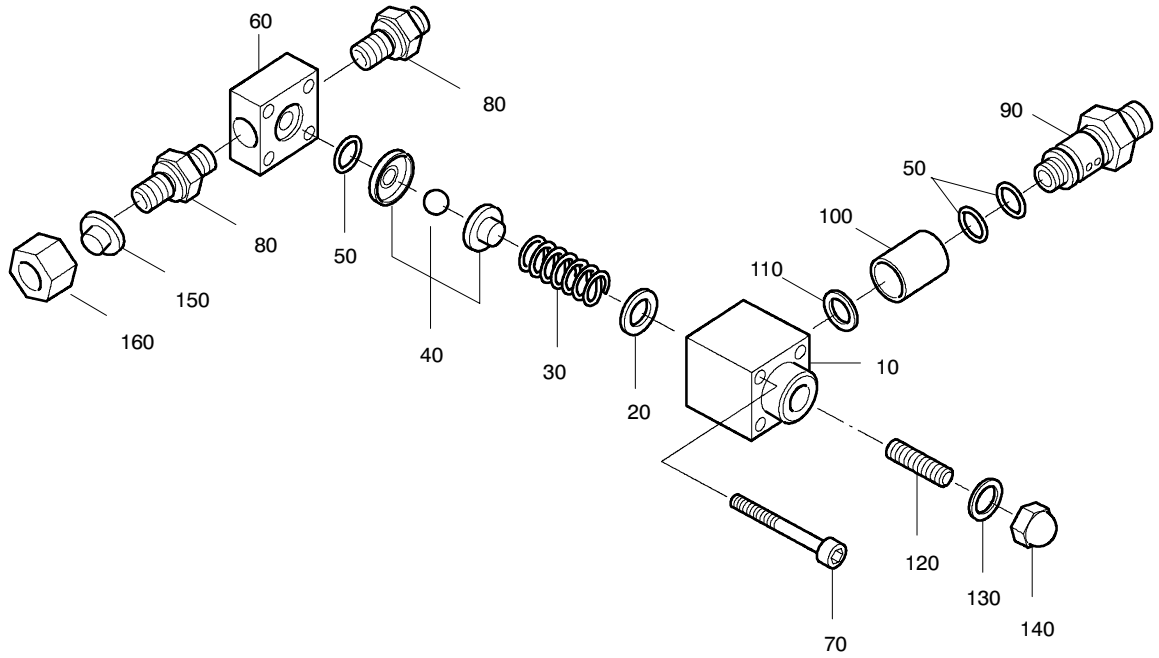

058138/09/97

Ersatzteilsätze
Spare parts sets
Kits de pièces dét.

Baugruppe 058138 Ödruckregulierventil
Assembly 058138 Oil pressure regulating valve
Assemblage 058138 Soupape de reglage de pression d' huile

A2.8- 24d

Klasse/ Class/ Classe			Pos.	Bestell-Nr. Part No. No. de cde.	Anz. Qty. Qté.	Benennung	Designation	Dénomination	Gew. Weight Poids (kg)	Abmessungen Dimensions Dimensions
a	b	c								
			10	*	1	Ventilgehäuse				f
			20	*	1	Scheibe	washer	disque		D15.5;H1.5;St 12 03
			30	2623	1	Druckfeder	spring	ressort de pression		
			40	*	1	Ventilsitz kpl.	ball valve seat plate	plaque de siege		Kugelventil
			50	N7091	3	O-Ring	o-ring	joint torique		9.25x1.78;FPM;75Sh.
			60	57132	1	Flansch	valve flange	brides des soupape		
			70	N781	2	Zylinderschraub	allen screw	vis a six pans creux	15 g	DIN 912;M6x60;8.8
			80	N20237	2	Gerader-Einschraubst.	male stud	raccord	14 g	GES 6 LR-WD;G1/8
			90	56301	1	Ölkontrollverschraubung	oil control coupling	raccord de controle		
			100	56302	1	Ölschauglas	oil sight glass	indicateur d'huile		
			110	N4051	1	Dichtring	gasket	joint	1 g	DIN 7603;A10x15x1
			120	N2969	1	Gewindestift	set screw	goujon filete	5 g	DIN 551;M8x16;5.8
			130	N3625	1	Dichtring	gasket	joint	1 g	DIN 7603;A8x14x1.5
			140	N84	1	Sechskant-Hutmutter	acorn nut	ecrou a chapeau	11 g	DIN 1587;M8;6;A3A
			150	N4530	1	Verschlußstopfen	plug	bouchon	10 g	VS 6 L/S;Rohr-AD=6
			160	N7430	1	Überwurfmutter	screw cap	ecrou-chapeau	9 g	M 6 L;Rohr-AD=6

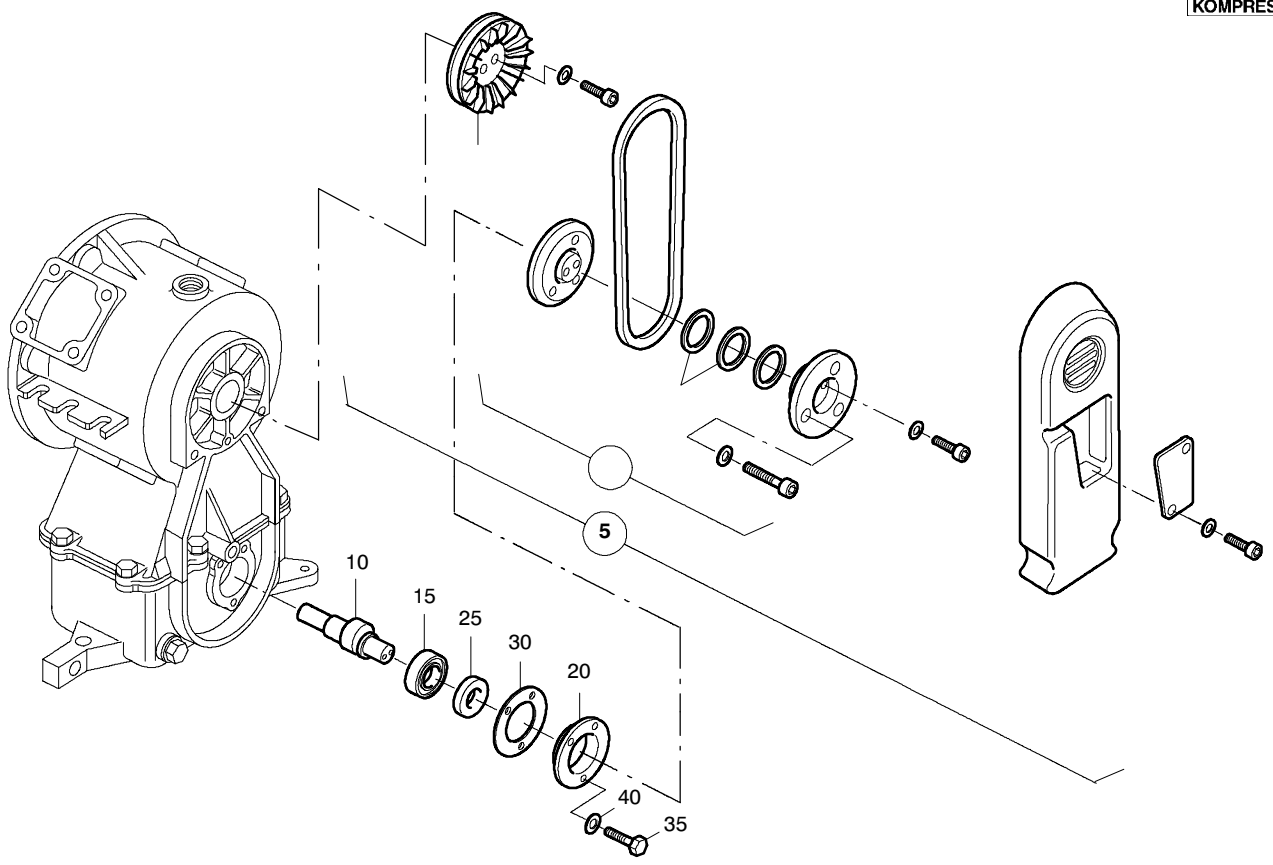

068237/09/97

Ersatzteilsätze
Spare parts sets
Kits de pièces dét.

Baugruppe 068237 Druckölschmierung
Assembly 068237 Lubricating system
Assemblage 069237 Lubrification

A2.8- 25

Klasse/ Class/ Classe			Pos.	Bestell-Nr. Part No. No. de cde.	Anz. Qty. Qté.	Benennung	Designation	Dénomination	Gew. Weight Poids (kg)	Abmessungen Dimensions Dimensions
a	b	c								
			5	**058307**	**1**	**Ölpumpenantrieb**	**oil pump drive**	**entrainement de pompe**		
			10	4704	1	Exzenterwelle	eccentric shaft	arbre d'excentrique		
			15	N91	1	Rillenkugellager	grooved ball bearing	roulement rainure a billes	,11 kg	20x47x14
			20	5348	1	Abschlußdeckel	bearing cap	chapeau de palier		
			25	N86	1	Wellendichtring	shaft seal	garniture en anneau		DIN 3760 ; A20x40x7
			30	149	1	Dichtung	gasket	joint		Di=47.5 ; Da=74.6
			35	N53	3	Sechskantschraube	hexagon screw	vis hexagonale	5 g	DIN 933 ; M6x16 ; 8.8
			40	N102	3	Scheibe, rund	washer	rondelle	1 g	DIN 125 ; B 6.4

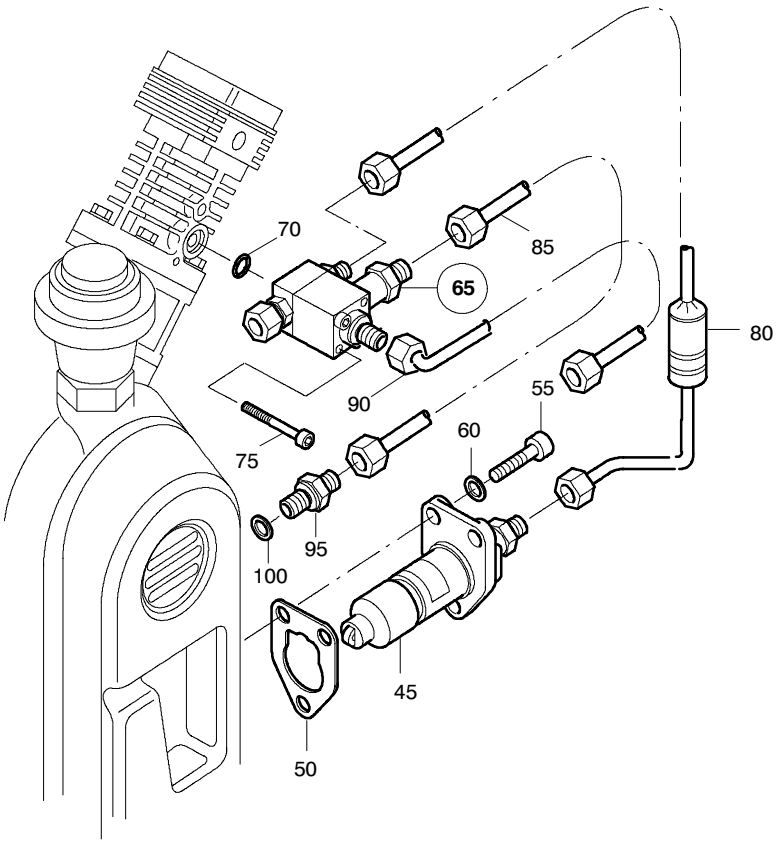

068237/09/97

Ersatzteilsätze
Spare parts sets
Kits de pièces dét.

Baugruppe 068237 Druckölschmierung
Assembly 068237 Lubricating system
Assemblage 069237 Lubrification

A2.8- 25a

Klasse/ Class/ Classe			Pos.	Bestell-Nr. Part No. No. de cde.	Anz. Qty. Qté.	Benennung	Designation	Dénomination	Gew. Weight Poids (kg)	Abmessungen Dimensions Dimensions
a	b	c								
			45	N83	1	Ölpumpe	oil pump	pompe a huile		
			50	2010	1	Dichtung	gasket	joint		
			55	N61	3	Zylinderschraube	allen screw	vis a six pans creux	15 g	DIN 912 ; M8x25 ; 8.8
			60	N58	3	Scheibe, rund	washer	rondelle	2 g	DIN 125 ; B 8.4
			65	**063120**	**1**	**Öldruckregulierventil**	**oil pressure regul. valve**	**soupape de reglage**		
			70	N7091	1	O-Ring	o-ring	joint torique		9.25x1.78
			75	N3407	2	Zylinderschraube	allen screw	vis a six pans creux		DIN 912 ; M6x80 ; 8.8
			80	069902	1	Verbindungsleitung kpl.	connecting pipe cpl.	tube de connextion cpl.		Druckölleitung
			85	069903	1	Verbindungsleitung kpl.	connection tube	tube de connexion		Ölrücklaufleitung
			90	071749	1	Verbindungsleitung kpl.				v Öldr.regulierv. z ZwFi
			95	N20002	1	Gerader-Einschraubst.	connector	raccord	14 g	GES 6 LR
			100	N4051	1	Dichtung	gasket	joint	1 g	DIN 7603 ; A10x15x1

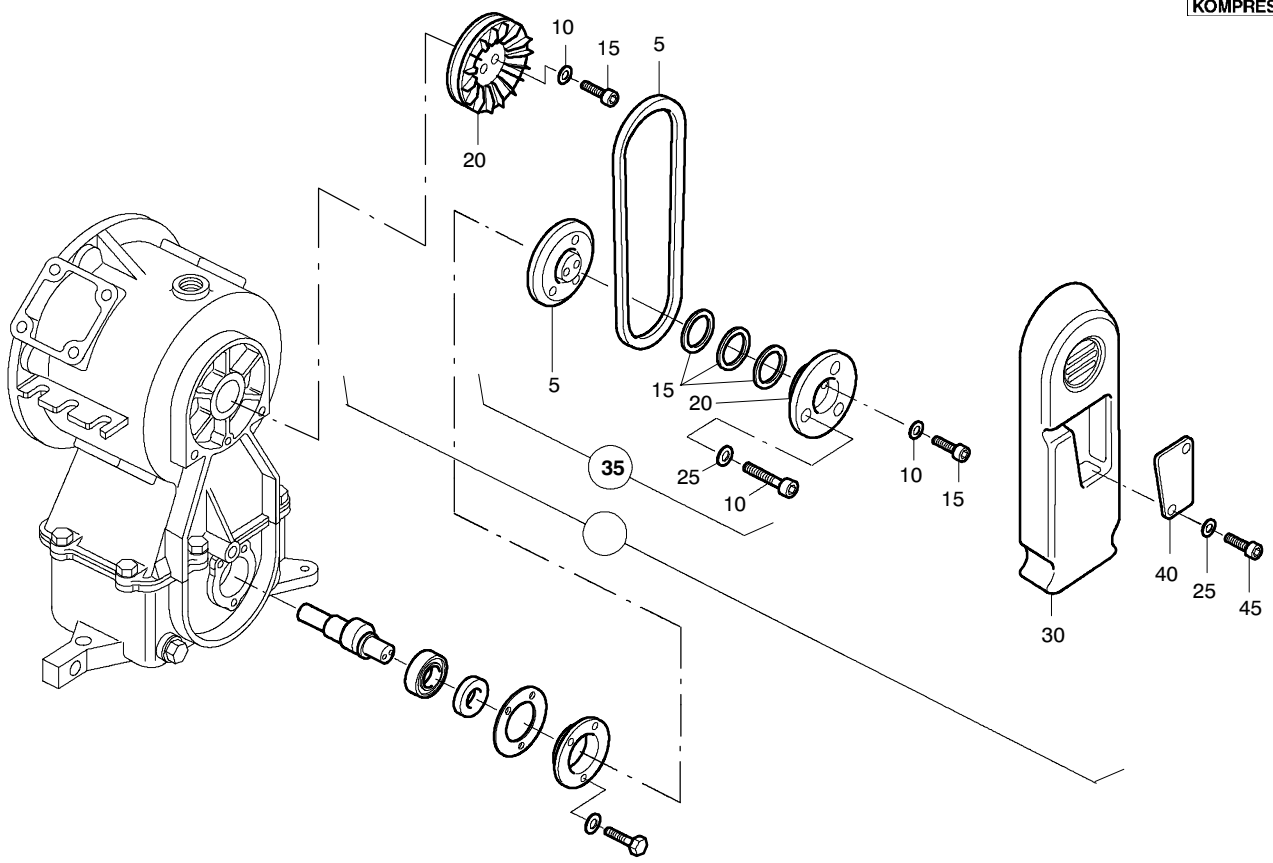

068237/09/97

Ersatzteilsätze
Spare parts sets
Kits de pièces dét.

Baugruppe 058307 Ölpumpenantrieb
Assembly 058307 Oil pump drive
Assemblage 058307 Entrainement du pompe à huile

A2.8- 25b

Klasse/ Class/ Classe			Pos.	Bestell-Nr. Part No. No. de cde.	Anz. Qty. Qté.	Benennung	Designation	Dénomination	Gew. Weight Poids (kg)	Abmessungen Dimensions Dimensions
a	b	c								
X			5	N4159	1	Keilriemen	v-belt	courroie trapezoidale	,052	SPZ ; Lw 737
			10	N1313	4	Federring	spring washer	anneau-ressort	1 g	DIN 7980 ; 6
			15	N210	4	Zylinderschraub	allen screw	vis a six pans creux	6 g	DIN 912 ; M6x20 ; 8.8
			20	56650	1	Keilriemenscheibe	v-belt pulley	poulie a gorge		
			25	N654	2	Federring	spring washer	anneau-ressort	1 g	DIN 7980 ; 8
			30	56649	1	Riemenschutzdeckel	belt guard cover	protecteur de courroie		
			35	**056651**	**1**	**Keilriemenscheibe**	**v-belt pulley**	**poulie a gorge**		
			40	56884	1	Distanz-Stück	spacer piece	piece d'ecartement	,07 kg	
			45	N61	2	Zylinderschraube	allen screw	vis a six pans creux	15 g	DIN 912 ; M8x25 ; 8.8

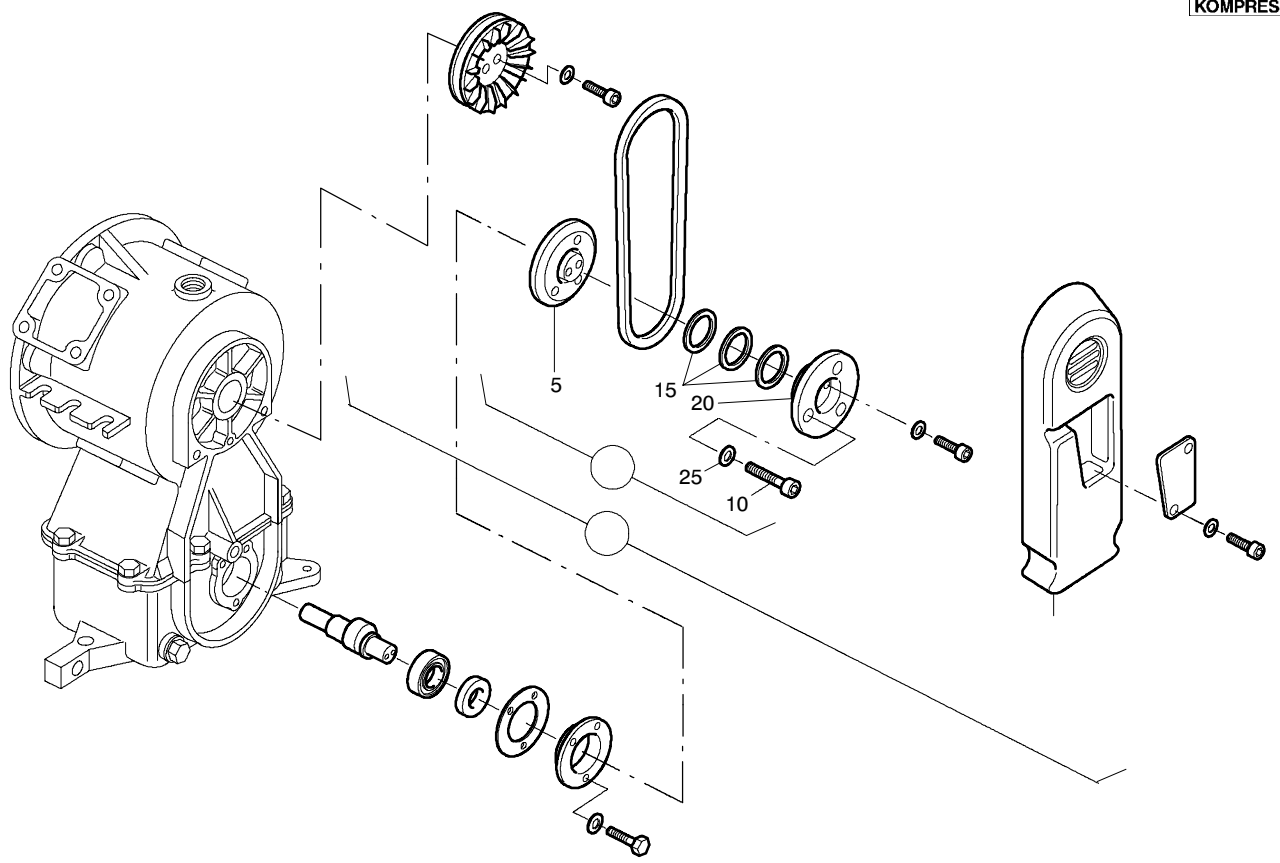

068237/09/97

Ersatzteilsätze
Spare parts sets
Kits de pièces dét.

Baugruppe 056651 Keilriemenscheibe
Assembly 056651 V-belt pulley
Assemblage 056651 Poulie à gorge

A2.8- 25c

Klasse/ Class/ Classe			Pos.	Bestell-Nr. Part No. No. de cde.	Anz. Qty. Qté.	Benennung	Designation	Dénomination	Gew. Weight Poids (kg)	Abmessungen Dimensions Dimensions
a	b	c								
			5	56652	1	Keilriemenscheibenteil	v-belt pulley part	partie de la poulie a gorge		
			10	N3158	3	Zylinderschraube	allen screw	vis a six pans creux	5 g	DIN 6912 ; M6x20
			15	N3159	3	Distanz-Scheibe	spacer disc	disque d'ecartement		44.5x25.2x0.5
			20	56653	1	Keilriemenscheibenteil	v-belt pulley part	partie de la poulie a gorge		
			25	N1313	3	Federring	spring washer	anneau-ressort	1 g	DIN 7980 ; 6

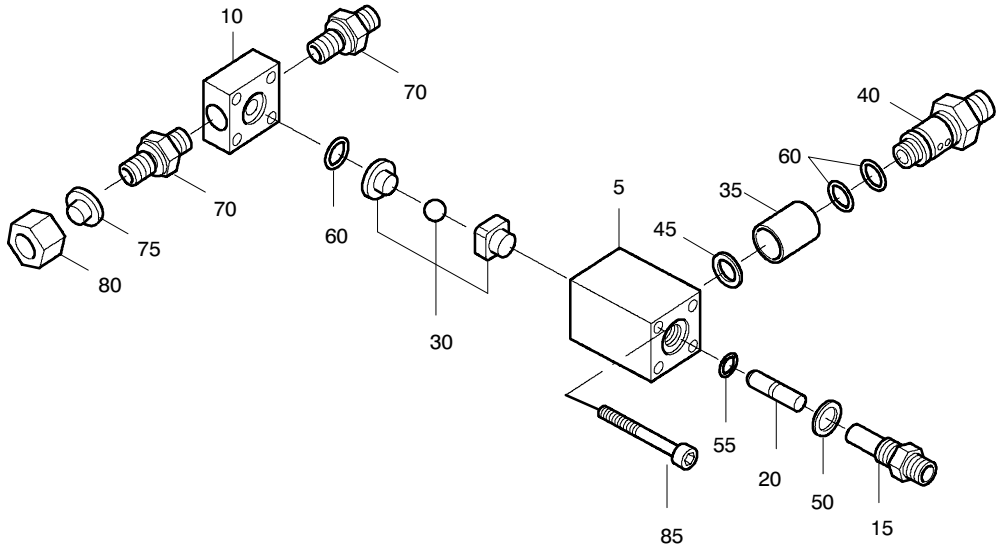

068237/09/97

Ersatzteilsätze
Spare parts sets
Kits de pièces dét.

Baugruppe 063120 Öldruckregulierventil
Assembly 063120 Oil pressure regulating valve
Assemblage 063120 Soupape de reglage d'huile

A2.8- 25d

Klasse/ Class/ Classe			Pos.	Bestell-Nr. Part No. No. de cde.	Anz. Qty. Qté.	Benennung	Designation	Dénomination	Gew. Weight Poids (kg)	Abmessungen Dimensions Dimensions
a	b	c								
			5		1	Ventilgehäuse				
			10	57132	1	Regulierventilflansch	Regulating valve flange	brides des soupape		
			15	63122	1	Verschraubung	coupling	raccord		
			20	67217	1	Ventilkolben	valve piston	piston a soupape		
			30	**072469**	**1**	**Kugelventilsitz kpl.**	**ball seat cpl.**	**siege de bille**		
			35	56302	1	Ölschauglas	oil sight glass	indicateur d'huile		
			40	56301	1	Ölkontrollverschraubung	oil control coupling	raccord de controle		
			45	N4051	1	Dichtung	gasket	joint	1 g	DIN 7603 ; A10x15x1
			50	N1316	1	Dichtung	gasket	joint	1 g	A13x20x2 ; Cu
			55	N4600	1	O-Ring	o-ring	joint torique		2.9x1.78
			60	N7091	3	O-Ring	o-ring	joint torique		9.25x1.78
			70	N20237	2	Gerader-Einschraubst.			14 g	GES 6 LR-WD
			75	N4530	1	Verschlußstopfen	plug	bouchon	10 g	VS 6 L/S
			80	N7430	1	Überwurfmutter	screw cap	ecrou-chapeau	9 g	M 6 L
			85	N1040	2	Zylinderschraube	allen screw	vis a six pans creux		DIN 912 ; M6x65 ; 8.8

BAUER KOMPRESSOREN

Ersatzteilliste C11.4 Kondensat-Ablaßautomatik 063876
Spare parts catalogue C11.4 Automatic condensate drain 063876
Liste de pièces C11.4 Purge automatique des condensats 063876

Baugruppe	Assembly	Groupe d'assemblage	Seite/page
Kondensat-Ablaßautomatik 063876	Automatic condensate drain unit 063876	Purge automatique des condensats 063876	C11.4- 1
Kondensatablaßventil kpl. 063761	Condensate drain valve assy. 063761	Soupape de purge cpl. 063761	C11.4- 2
Kondensatablaßventil 064009	Condensate drain valve 064009	Soupape de purge cpl. 064009	C11.4- 3
Kondensatablaßventil 064008	Condensate drain valve 064008	Soupape de purge cpl. 064008	C11.4- 4
Schutzgehäuse, Taktgeber, Zyklenzähler	Control box, electrical timers, cycle counter	Boîtier de protection, minuteries électriques, compteur de cycles	C11.4- 5

Änder.-Nr. Change no. No. de change	Datum Date	Änderung	Change	Changement
0	01.05.1985	Grundausgabe	Basic edition	Edition de base
1	01.06.1986	Kondensatablaßventile	Condensate drain valves	Soupapes de purge
2	18.04.1990	Elektrische Laufschaltwerke	Electrical timers	Minuteries électriques
3	09.08.1991	Kondensatbehälter, Düse	Condensate tank, nozzle	Réservoir à condensats, buse
4	01.08.1998	Schutzgehäuse	Control box	Boîtier de protection

BAUER KOMPRESSOREN

Wichtige Hinweise für Teilebestellung:

Bestell-Nr., die mit der Ziffer 0 beginnen, bezeichnen Baugruppen, die komplett geliefert werden.Teile ohne Bestell-Nr. sind nur zur Information für die Montage aufgeführt. Sie sind nicht als Ersatzteil erhältlich. Bei Ersatzteilbestellungen erwarten Sie unsere richtige Lieferung; deshalb benötigen wir von Ihnen folgende Angaben (siehe unten gezeigtes Typenschild):

1. Modellbezeichnung, Fabrik-Nr. sowie Fertigungsstand von Anlage/Block
2. Stückzahlen
3. Benennung und Best.-Nr. des gewünschten Teils

Bestell-Beispiel:

Für Kompressorblock ...
Fabrik-Nr. 524-0528/1/2 drei Dichtungen 8263-090

Important notes for spare parts orders:

Part nos. beginning with digit 0 indicate parts available as complete assemblies. Parts without part no. are indicated for assembly reference, only. These parts are not available as single parts.When placing an order for spare parts, please give the following items so as to ensure our correct delivery (see indentification plate shown below):

1. Model, serial no. as well as design standard of unit/block
2. Quantity required
3. Name and part no.

Example for order:

For compressor block ...
serial no. 524-0528/1/2, three gaskets 8263-090

Avis important pour la commande de pièces:

Les nos. de commande commençant par le chiffre 0 indiquent les pièces livrées au complet. Les pièces sans no. de commande sont indiquées uniquement pour information de montage. Elles ne sont pas livrées individuellement. Pour que la livraison de pièces de rechange corresponde à la commande, veuillez bien nous fournir les données suivantes (voir plaque d'identité ci-dessous):

1. Modèle, no. de série et standard de construction de bloc compresseur/groupe
2. Quantité désirée
3. Dénomination et no. de commande de la pièce désirée

Exemple de commande:

Pour bloc compresseur ...
no. de série 524-0528/1/2, trois joints no. de cde. 8263-090

Wartungssätze

a =Wartungssatz 500 h
b = Wartungssatz 1000 h
c = Wartungssatz 2000 h

In den Spalten sind die im entsprechenden Satz enthaltenen Teile angekreuzt. Bitte beachten, daß die höheren Sätze die untergeordneten nicht beinhalten, d.h. für eine 2000-Stunden-Wartung wird 1x Satz a, 1x Satz b und 1x Satz c benötigt.

Maintenance kit

a = Maintenance kit 500 h
b = Maintenance kit 1000 h
c = Maintenance kit 2000 h

The columns contain the parts that are included in the respective parts set. Please note that the higher graded kits do not include the lower ones, i.e. for a 2000 hours maintenance, one kit a, one kit b plus one kit c are required.

Kits de pièces d'entretien :

a = Kit d'entretien 500 h
b = Kit d'entretien 1000 h
c = Kit d'entretien 2000 h

Les pièces contenues dans les kits correspondants sont marquées d'une croix dans les colonnes. Veuillez observer que les kits supérieurs ne contiennent pas les kits subordonnés, c'est-à-dire pour un entretien de 2000 heures il faut avoir 1x kit a, 1x kit b et 1x kit c.

Anmerkungen zur Identifikation:
Remarks for identification:
Remarques pour l'identification:

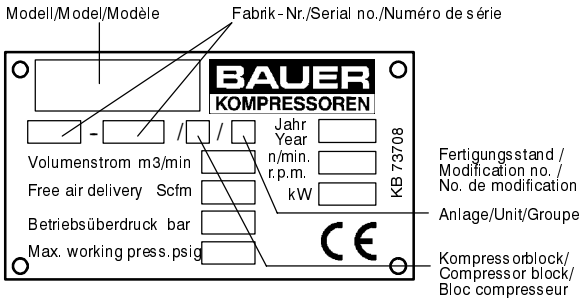

ACHTUNG

Nur Schrauben und Stiftschrauben der Qualität 8.8 verwenden!

ATTENTION

Use only screws and studs in quality 8.8! This quality is equivalent to SAE J 429 d grade 5.

ATTENTION

N'utiliser que des vis et des goujons filetés de la qualité 8.8!

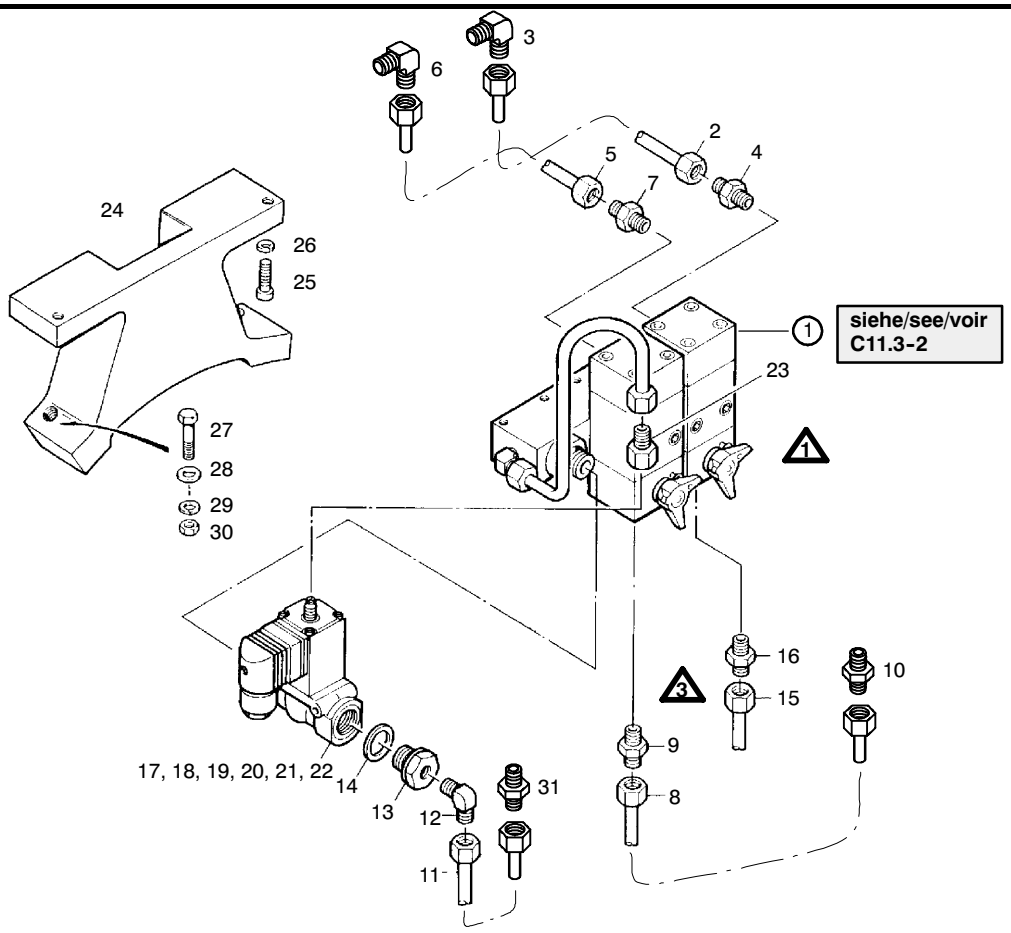

063876/08/98

Wartungssätze
Mainenance kits
Kits d'entretien

Baugruppe 063740 Kondensat-Ablaßautomatik
Assembly 063740 Automatic condensate drain unit
Assemblage 063740 Purge automatique des condensats

C11.4- 1

Klasse/ Class/ Classe			Pos.	Bestell-Nr. Part No. No. de cde.	Anz. Qty. Qté.	Benennung	Designation	Dénomination	Gew. Weight Poids (kg)	Abmessungen Dimensions Dimensions
a	b	c								
			1	063761	1	Kondensatablaßventilbgr.	Cond. drain valve assy	Soupape de purge cpl.		
			2	071229	1	Verbindungsleitung	Connecting tube	Tuyau		
			3	N20003	1	Winkelrohrverschraubung	Male elbow	Raccord coudé mâle		WES 6-LRK
			4	N20237	1	Gerade Rohrverschr.	Male connector	Raccord droit mâle		GES 6 LR-WD
			5	071231	1	Verbindungsleitung	Connecting tube	Tuyau		∅8x1, DIN 2462
			6	N20003	1	Winkelrohrverschraubung	Male elbow	Raccord coudé mâle		WES 6-LRK
			7	N20237	1	Gerade Rohrverschr.	Male connector	Raccord droit mâle		GES 6 LR-WD
			8	071233	1	Verbindungsleitung	Connecting tube	Tuyau		∅8x1, DIN 2462
			9	065800	1	Verschraubung m. Düse	Tube conn. with nozzle	Racc. droit mâle av. buse		∅2 mm
			10	N20287	1	Gerade Rohrverschr.	Male connector	Raccord droit mâle		GES 8 SR-WD
			11	071235	1	Verbindungsleitung	Connecting tube	Tuyau		∅8x1, DIN 2462
			12	N20191	2	Winkelrohrverschraubung	Male elbow	Raccord coudé mâle		WES 12 LLRK
			13	N9155		Reduzierung	Reducer	Réducteur		Rl 1/2"x1/4"
			14	N293		Dichtring	Gasket	Joint		A21x28. DIN 7603
			15	071237	1	Verbindungsleitung	Connecting tube	Tuyau		∅8x1, DIN 2462
			16	070615	1	Verschraubung m. Düse	Tube conn. with nozzle	Racc. droit mâle av. buse		∅0,8 mm
			17	N 16270*	1	Zwei-Wege-Magnetventil	2-way solenoid valve	Electrovanne 2 voies		220 V, 40 - 60 Hz
			18	N 16382*	1	Zwei-Wege-Magnetventil	2-way solenoid valve	Electrovanne 2 voies		115 V, 50 - 60 Hz
			19	N 16384*	1	Zwei-Wege-Magnetventil	2-way solenoid valve	Electrovanne 2 voies		240 V, 50 - 60 Hz
			20	N 16381*	1	Zwei-Wege-Magnetventil	2-way solenoid valve	Electrovanne 2 voies		12 V DC
			21	N 16387*	1	Zwei-Wege-Magnetventil	2-way solenoid valve	Electrovanne 2 voies		24 V DC

* Bei Bestellung Spannung und Frequenz angeben / Please specifiy vontage and frequency on order / Veuillez indiquer tension et fréquence à la commande

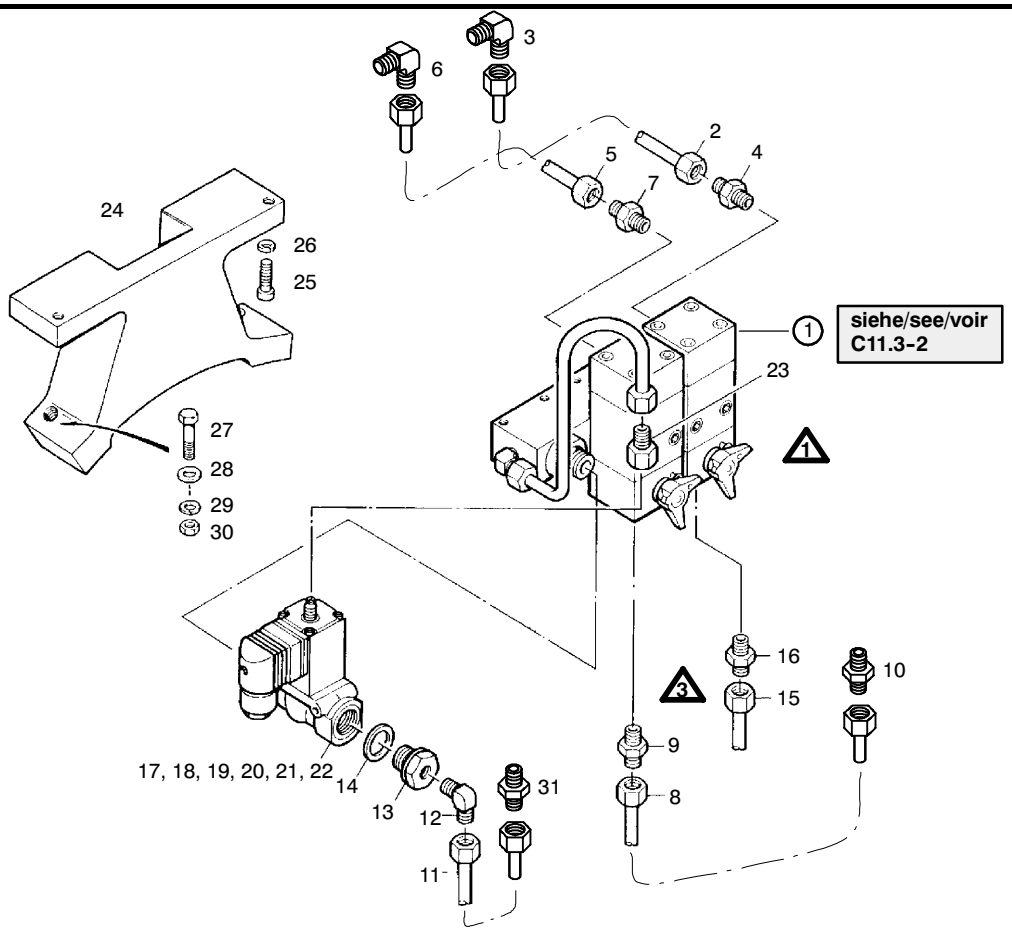

063876/08/98

Wartungssätze
Mainenance kits
Kits d'entretien

Baugruppe 063740 Kondensat-Ablaßautomatik
Assembly 063740 Automatic condensate drain unit
Assemblage 063740 Purge automatique des condensats

C11.4- 1

Klasse/ Class/ Classe a	b	c	Pos.	Bestell-Nr. Part No. No. de cde.	Anz. Qty. Qté.	Benennung	Designation	Dénomination	Gew. Weight Poids (kg)	Abmessungen Dimensions Dimensions
			22	N 18364*	1	Zwei-Wege-Magnetventil	2-way solenoid valve	Electrovanne 2 voies		24 V AC
			23	64010		Gerade Aufschraubv.	Straight female connector	Raccord droit		GAI 6-L
			24	63836		Halterung	Bracket	Fixation		
			25	N19536	2	Innensechskantschraube	Allen screw	Vis à six pans creux		M6x30, DIN 912
			26	N100	2	Federring	Lock washer	Rondelle élastique		A6, DIN 127
			27	N19508	2	Sechskantschraube	Hex. screw	Vis hex.		M8x35, DIN 933
			28	N58	4	Scheibe	Washer	Rondelle		B8.4 DIN 125
			29	N108	2	Federring	Lock washer	Rondelle élastique		A8, DIN 127
			30	N57	2	Sechskantmutter	Hex. nut	Ecrou hex.		M8, DIN 934

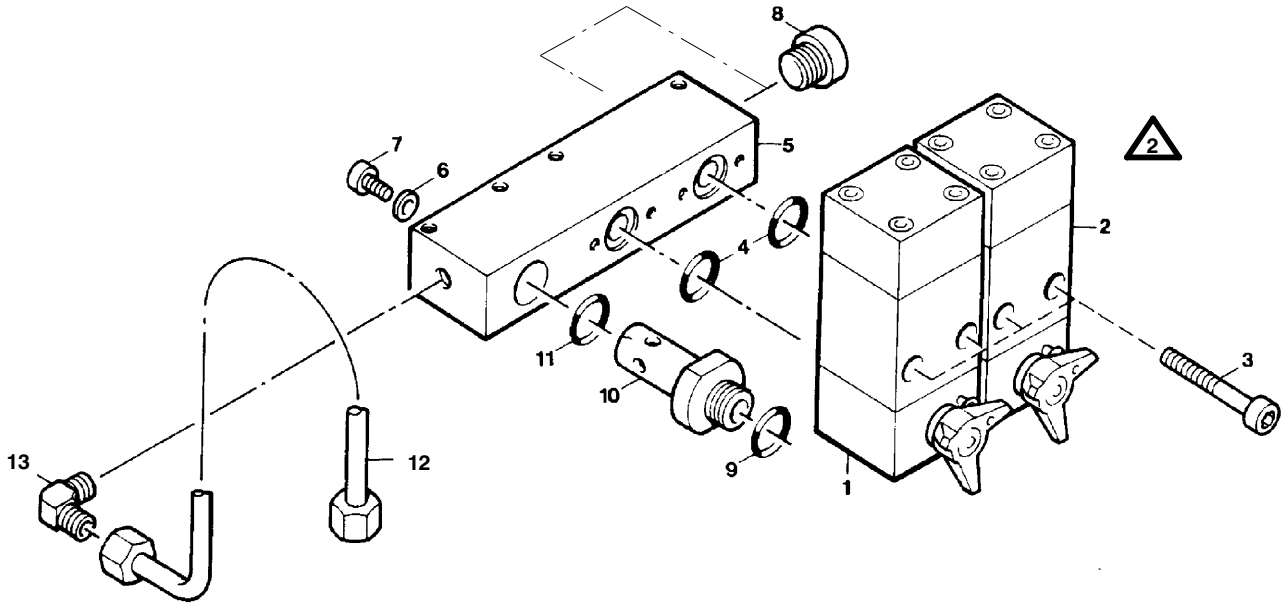

063761/08/98

Wartungssätze
Mainenance kits
Kits d'entretien

Baugruppe 063761 Kondensatventilbaugruppe
Assembly 063761 Condensate drain valve assy.
Assemblage 063761 Soupapes de purge cpl.

C11.4- 2

Klasse/ Class/ Classe			Pos.	Bestell-Nr. Part No. No. de cde.	Anz. Qty. Qté.	Benennung	Designation	Dénomination	Gew. Weight Poids (kg)	Abmessungen Dimensions Dimensions
a	b	c								
			1	064009	1	Kondensatablaßventil	Condensate drain valve	Soup. de purge		3. St / 3rd st / 3e étage
			2	064008	1	Kondensatablaßventil	Condensate drain valve	Soupape de purge		4. St. / 4th st. /4e étage
			3	N724	4	Innensechskantschraube	Allen screw	Vis à six pans creux	0.010	M 6 x 40, DIN 912
			4	N638	2	O-Ring	O-ring	Joint torique	0.005	Ø 11 x 2,5
			5	64007	1	Sammelleiste	Manifold	Listeau collecteur		
			6	N3625	1	Dichtung	Gasket	Joint	0.005	8 x 14 x 1,5, DIN 7603
			7	N829	1	Innensechskantschraube	Allen screw	Vis à six pans creux	0.020	M 8 x 16, DIN 912
			8	N16266	1	Verschlußstopfen	Plug	Bouchon fileté		VSTI R3/8"-ed
			9	N2320	1	O-Ring	O-ring	Joint torique	0.002	Ø 21,95 x 1,78
			10	64004	1	Ventilverbindung	Valve connection	Raccord de soupape		
			11	N2507	1	O-Ring	O-ring	Joint torique	0.005	Ø 18,77 x 1,78
			12	071224	1	Verbindungsleitung	Connection	Conduite de connexion	0.035	Ø 6 x 1, DIN 2462
			13	N20305	1	Winkelrohrverschraubung	Male elbow	Raccord coudé mâle	0.025	WES 6 LLRK

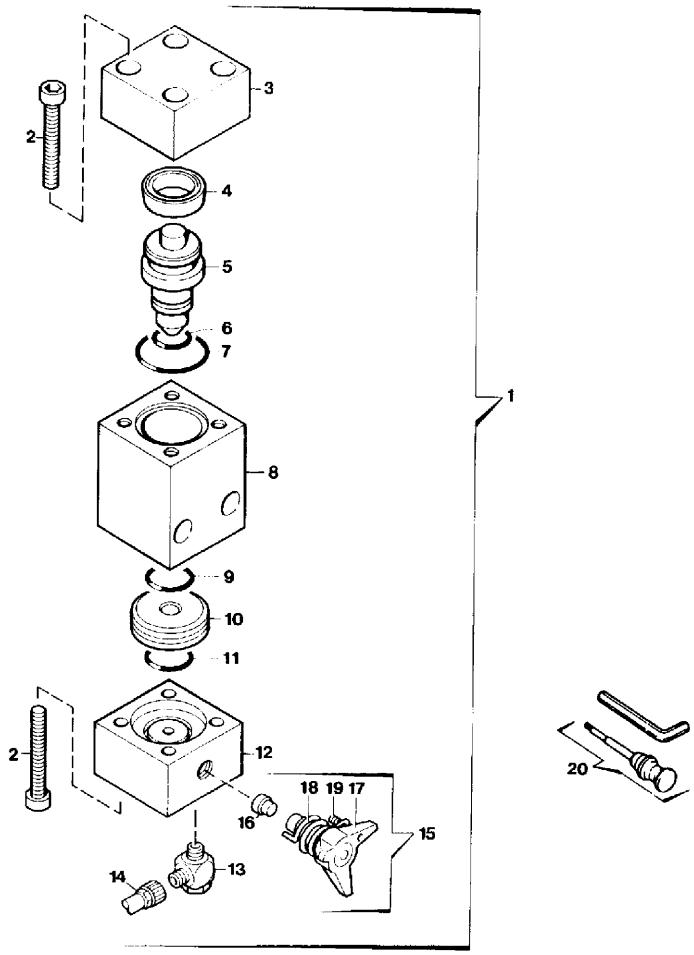

064009/08/98

Wartungssätze
Mainenance kits
Kits d'entretien

Baugruppe 064009 Kondensatablaßventil
Assembly 064009 Condensate drain valve
Assemblage 064009 Soupape de purge

C11.4- 3

Klasse/ Class/ Classe a	b	c	Pos.	Bestell-Nr. Part No. No. de cde.	Anz. Qty. Qté.	Benennung	Designation	Dénomination	Gew. Weight Poids (kg)	Abmessungen Dimensions Dimensions
			1	064009	1	Kondensatablaßventil	Condensate drain valve	Soupape de purge des cond	0.425	
			2	N19536	8	Innensechskantschraube	Allen screw	Vis à six pans creux	0.008	M 6 x 30 DIN 912
			3	64000	1	Kopfteil	Top flange	Bride supérieure	0.070	
	X		4	N16269	1	Nutring	Sealing ring	Gague d'étanchéité		Ø 25 x 17 x 5,5
		X	5	64003	1	Kolben	Piston	Piston	0.025	
	X		6	N638	1	O-Ring	O-ring	Joint torique	0.001	Ø 11 x 2,5
	X		7	N4881	1	O-Ring	O-ring	Joint torique	0.002	Ø 25 x 2
			8	64001	1	Mittelteil	Valve body	Corps de soupape	0.135	
	X		9	N2507	1	O-Ring	O-ring	Joint torique	0.001	Ø 18,77 x 1,78
	X		10	64005	1	Ventilsitz	Valve seat	Siège de soupape	0.010	Ø 9
	X		11	N4496	1	O-Ring	O-ring	Joint torique	0.001	Ø 14 x 1,78
			12	64002	1	Fußteil	Base flange	Bride infèrieure	0.095	
			13	N16334	1	Schwenkverschraubung	Adjustable male branch T	Raccord en T orientable		
			14	N15088	1	Schlauch	Hose	Tuyau		
			15	065500	1	Knebelschraube kpl.	Drain tap assy.	Robinet cpl.		
			16	64498	1	Dichtung	Gasket	Joint		
			17	11392	1	Knebelschraube	Drain tap	Robinet		
			18	65310	1	Schenkelfeder	Spring	Ressort à branches		
			19	N16947	1	Gewindestift	Stud	Vis sans tête		M 3 x 16, DIN 934
			20	067458	1	Werkzeugsatz f. Knebel-schraube	Tool set for drain tap	Jeu d'outils pour robinet		

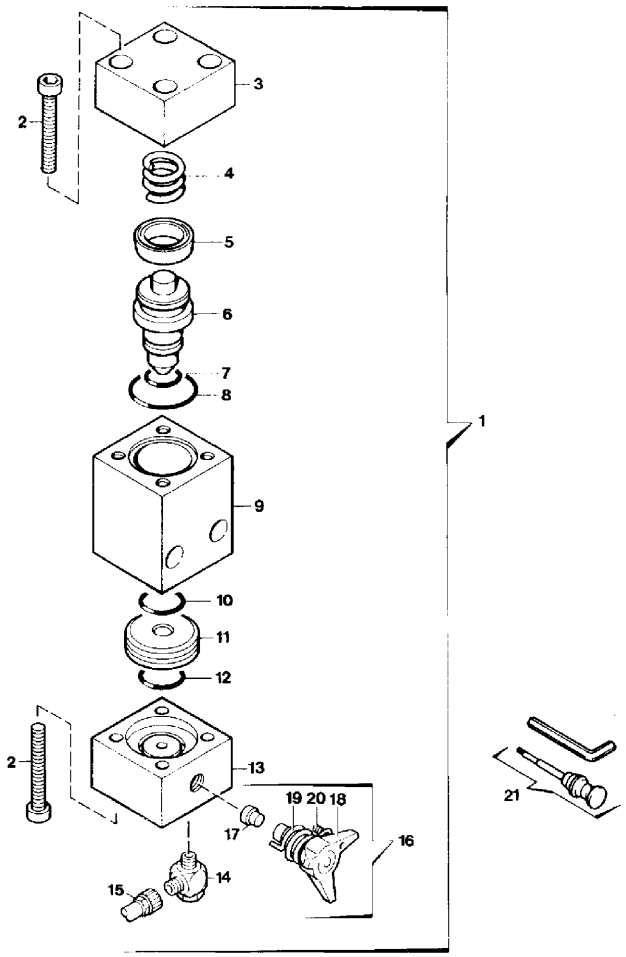

064008/08/98

Wartungssätze
Mainenance kits
Kits d'entretien

Baugruppe 064008 Kondensatablaßventil
Assembly 064008 Condensate drain valve
Assemblage 064008 Soupape de purge

C11.4- 4

Klasse/ Class/ Classe			Pos.	Bestell-Nr. Part No. No. de cde.	Anz. Qty. Qté.	Benennung	Designation	Dénomination	Gew. Weight Poids (kg)	Abmessungen Dimensions Dimensions
a	b	c								
			1	064008	1	Kondensatablaßventil	Condensate drain valve	Soupape de purge des cond	0.425	
			2	N19536	8	Innensechskantschraube	Allen screw	Vis à six pans creux	0.008	M 6 x 30 DIN 912
			3	64000	1	Kopfteil	Top flange	Bride supérieure	0.070	
			4	64011	1	Feder	Spring	Ressort	0.014	
	X		5	N16269	1	Nutring	Sealing ring	Gague d'étanchéité		Ø 25 x 17 x 5,5
		X	6	64003	1	Kolben	Piston	Piston	0.025	
	X		7	N638	1	O-Ring	O-ring	Joint torique	0.001	Ø 11 x 2,5
	X		8	N4881	1	O-Ring	O-ring	Joint torique	0.002	Ø 25 x 2
			9	64001	1	Mittelteil	Valve body	Corps de soupape	0.135	
	X		10	N2507	1	O-Ring	O-ring	Joint torique	0.001	Ø 18,77 x 1,78
	X		11	64005	1	Ventilsitz	Valve seat	Siège de soupape	0.010	Ø 9
	X		12	N4496	1	O-Ring	O-ring	Joint torique	0.001	Ø 14 x 1,78
			13	64002	1	Fußteil	Base flange	Bride infèrieure	0.095	
			14	N16334	1	Schwenkverschraubung	Adjustable male branch T	Raccord en T orientable		
			15	N15088	1	Schlauch	Hose	Tuyau		
			16	065500	1	Knebelschraube kpl.	Drain tap assy.	Robinet cpl.		
			17	64498	1	Dichtung	Gasket	Joint		
			18	11392	1	Knebelschraube	Drain tap	Robinet		
			19	65310	1	Schenkelfeder	Spring	Ressort à branches		
			20	N16947	1	Gewindestift	Stud	Vis sans tête		M 3 x 16, DIN 934
			21	067458	1	Werkzeugsatz f. Knebel-schraube	Tool set for drain tap	Jeu d'outils pour robinet		

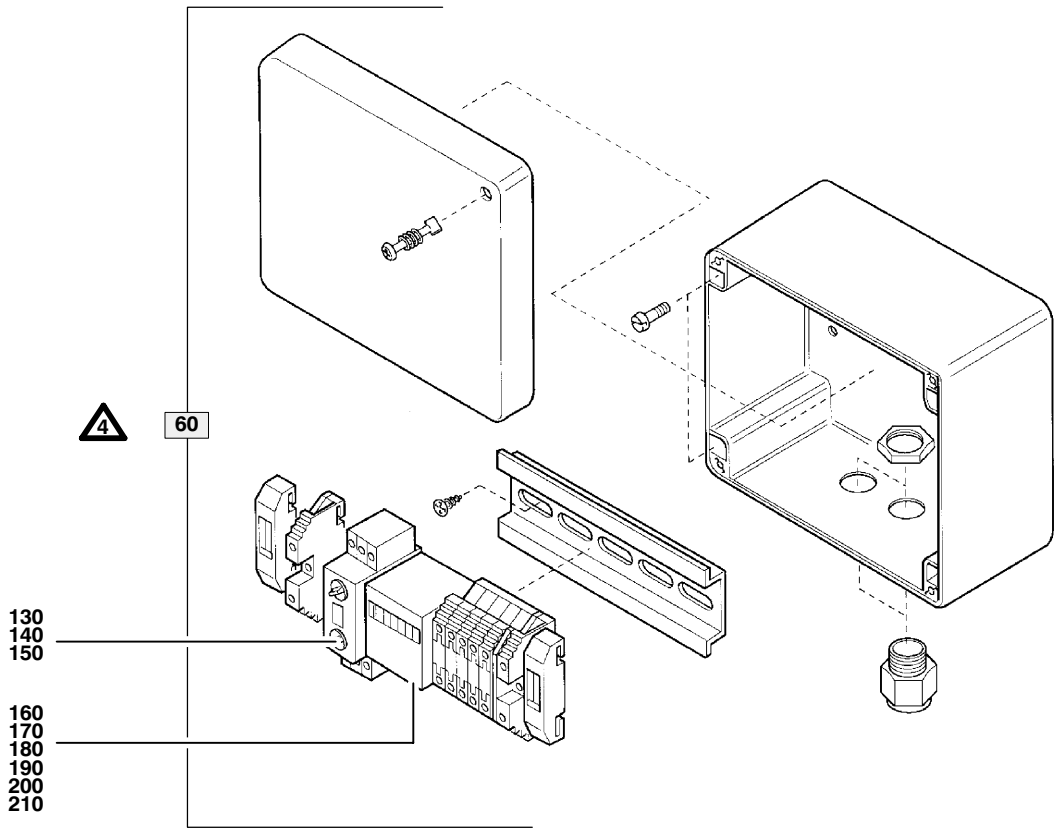

685180/08/98

Wartungssätze
Mainenance kits
Kits d'entretien

Baugruppe 068518 Schutzgehäuse, Taktgeber, Zyklenzähler
Assembly 068518 Control box, timers, cycle counter
Assemblage 068518 Boîtier de protection, minuteries, compteur de cycles

C11.4- 5

Klasse/ Class/ Classe a	b	c	Pos.	Bestell-Nr. Part No. No. de cde.	Anz. Qty. Qté.	Benennung	Designation	Dénomination	Gew. Weight Poids (kg)	Abmessungen Dimensions Dimensions
			60	**068518***	**1**	**Schutzgehäuse**	**protective housing**	**boitier de protection**		**160x120x90**
			130	N16202	1	Taktgeber	timer	minuterie electrique		220-230V/24VAC/DC
			140	N18484	1	Taktgeber	timer	minuterie electrique		24-240V;DC/AC
			150	N18781	1	Taktgeber	timer 12 VDC	minuterie electrique		Typ: CI3X20;12V;DC
			160	N19093*	1	Summierzähler	cycle counter	calculateur periodique	55 g	240 V, 50-60 Hz
			170	N19094*	1	Summierzähler	cycle counter	calculateur periodique	55 g	220 V, 50-60 Hz
			180	N19095*	1	Summierzähler	cycle counter	calculateur periodique	55 g	110 V, 50 Hz
			190	N19096*	1	Summierzähler	cycle counter	calculateur periodique	55 g	24 VAC, 50 Hz
			200	N19097*	1	Summierzähler	cycle counter	calculateur periodique	55 g	12 VDC
			210	N19224*	1	Summierzähler	cycle counter	calculateur periodique	55 g	24 VDC

* Zusatzausstattung gem. Auftrag optional acc. to order optionnel selon commande

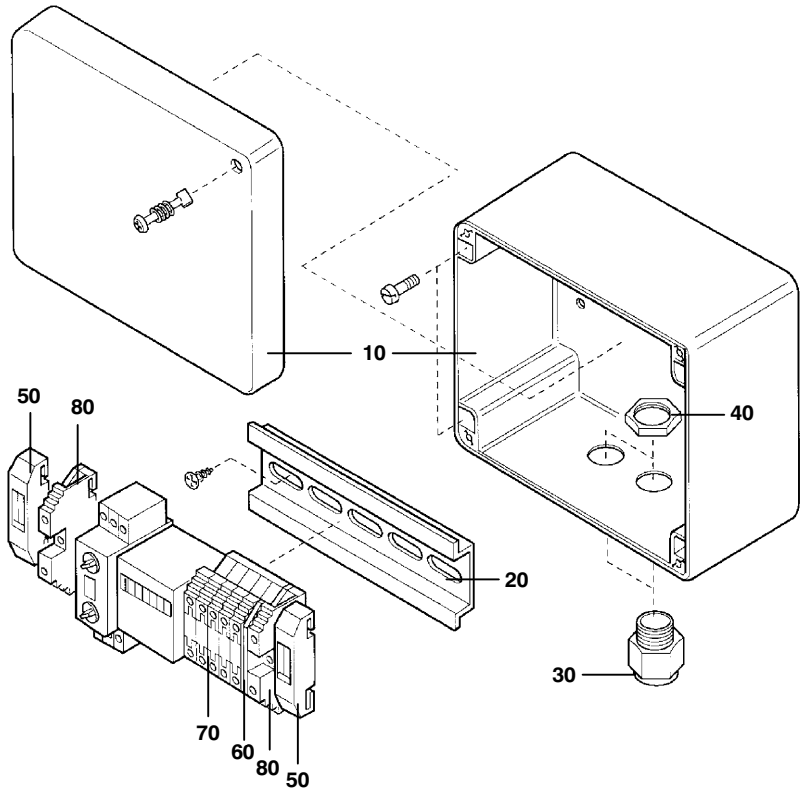

068518/08/98

Wartungssätze
Mainenance kits
Kits d'entretien

Baugruppe 068518 Schutzgehäuse
Assembly 068518 Control box
Assemblage 068518 Boîtier de protection

C11.4- 5a

Klasse/ Class/ Classe a	b	c	Pos.	Bestell-Nr. Part No. No. de cde.	Anz. Qty. Qté.	Benennung	Designation	Dénomination	Gew. Weight Poids (kg)	Abmessungen Dimensions Dimensions
			10	N18280	1	Leergehäuse	bare housing	boitier vide		
			20	N16126*	mm	Tragschiene	rail			130 mm; TS35x7.5;St
			30	N3101	4	Kabelverschraubung	cable union	cable vissage		Pg 11;m.Dichtg.
			40	N3104	4	Gegenmutter	counternut	contre-ecrou		DIN 46320;Pg 11
			50	N21594	2	End-Winkel	end bracket	angle		
			60	N21601	1	Abschlußplatte	end plate	plaque de fermeture		4mm^2;grau
			70	N21597	8	Durchgangsklemme	feed-through terminal	borne		4mm^2
			80	N21609	2	Schutzleiterklemme	ground terminal	borne		4mm^2

BAUER KOMPRESSOREN

Ersatzteilliste
Spare parts catalogue
Liste de pièces

Code C25.1

Kondensat-Ablaßautomatik
Automatic condensate drain unit
Purge automatique du condensat

068399 .... IK14.11

Baugruppe	Assembly	Groupe d'assemblage	Seite/page
Kondensat-Ablaßautomatik 068339	Automatic condensate drain unit 068339	Purge automatique des condensats 068339	C25.1-1
Kondensatablaßventilbaugrupe 068337	Condensate drain valve asssy 068337	Soupape de purge cpl. 068337	C25.1-2
Kondensatablaßventil 060410	Condensate drain valve 060410	Soupape de purge 060410	C25.1-3
Kondensatablaßventil 061010	Condensate drain valve 061010	Soupape de purge 061010	C25.1-4
Kondensatablaßventil 066004	Condensate drain valve 066004	Soupape de purge 066004	C25.1-4
Laufschaltwerke	Electrical timers	Minuteries électriques	C25.1-5

Änderungsblatt **C25**
Change record
Table des changements

Änder.-Nr. Change no. No. de change-ment	Datum Date	Änderung	Change	Changement
0	02.01.1989	Grundausgabe	Basic edition	Edition de base
22	13.12.1994	Kondensatventil 072783	Condenate drain valve 072783	Soupape de purge 072783
23				
24				
25				
5				

Wichtige Hinweise für Teilebestellung:

Bestell-Nr., die mit der Ziffer 0 beginnen, bezeichnen Baugruppen, die komplett geliefert werden.Teile ohne Bestell-Nr. sind nur zur Information für die Montage aufgeführt. Sie sind nicht als Ersatzteil erhältlich. Bei Ersatzteilbestellungen erwarten Sie unsere richtige Lieferung; deshalb benötigen wir von Ihnen folgende Angaben (siehe unten gezeigtes Typenschild):
1. Modellbezeichnung, Fabrik-Nr. sowie Fertigungsstand von Anlage/Block
2. Stückzahlen
3. Benennung und Best.-Nr. des gewünschten Teils

Bestell-Beispiel:

Für Kompressoranlage ..., Fabrik-Nr.
524-0528/2/5 drei Dichtungen N8263

Important notes for spare parts orders:

Part nos. beginning with digit 0 indicate parts available as complete assemblies.Parts without part no. are indicated for assembly reference, only. These parts are not available as single parts.When placing an order for spare parts, please give the following items so as to ensure our correct delivery (see indentification plate shown below):

1. Model, serial no. as well as design standard of unit/block
2. Quantity required
3. Name and part no.

Example for order:

For compressor unit ..., serial no.
524-0528/2/5, three gaskets N8263

Avis important pour la commande de pièces:

Les nos. de commande commençant par le chiffre 0 indiquent les pièces livrées au complet. Les pièces sans no. de commande sont indiquées uniquement pour information de montage. Elles ne sont pas livrées individuellement. Pour que la livraison de pièces de rechange corresponde à la commande, veuillez bien nous fournir les données suivantes (voir plaque d'identité ci-dessous):

1. Modèle, no. de série et standard de construction de bloc compresseur/groupe
2. Quantité désirée
3. Dénomination et no. de commande de la pièce désirée

Exemple de commande:

Pour installation compresseur ..., no.
524-0528/2/5, trois joints no. de cde. N8263

Ersatzteilsätze/Spare parts set/Kits de pièces détachées:

0 = Dichtungssatz/Set of gaskets/Kit de joints d'étanchéité . . . . . Best.-Nr./Part no./No.de. cde. N 6207
2 = Wartungssatz, 2 Jahre/Maintenance kit, 2 years/Kit d'entretien, 2 ans . . . . . Best.-Nr./Part no./No.de. cde. N6208
5 = Wartungssatz, 5 Jahre/Maintenance kit, 5 years/Kit d'entretien, 5 ans . . . . . Best.-Nr./Part no./No.de. cde. N6209

In den Spalten ist jeweils die im entsprechenden Satz enthaltene Teile-Stückzahl angegeben.
The columns contain the number of parts that are included in the respective parts set.
Le nombre des pièces contenues dans les kits est indiquée dans les colonnes.

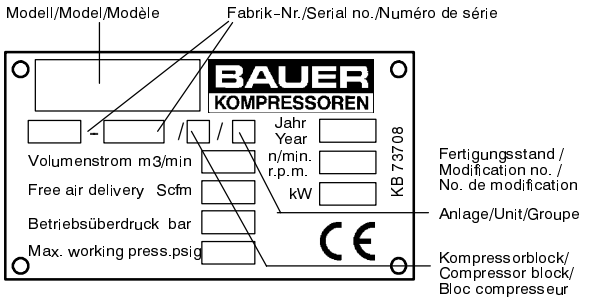

ACHTUNG

Nur Schrauben und Stiftschrauben der Qualität 8.8 verwenden!

ATTENTION

Use only screws and studs in quality 8.8! This quality is equivalent to SAE J 429 d grade 5.

ATTENTION

N'utiliser que des vis et des goujons filetés de la qualité 8.8!

C25.1- 6

BAUER KOMPRESSOREN

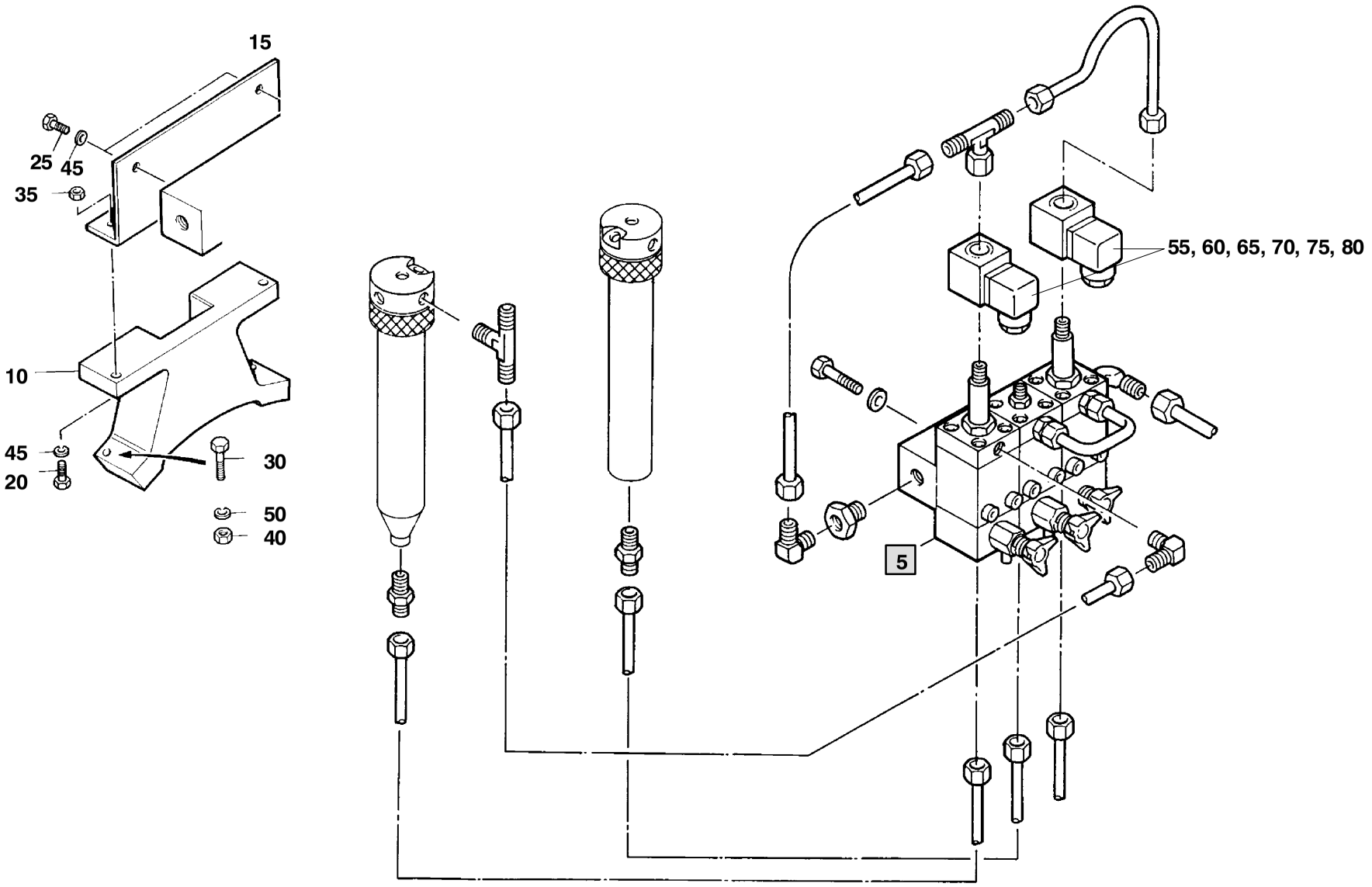

Ersatzteilsätze
Spare parts sets
Kits de pièces dét.

Baugruppe 068339 Kondensat-Ablaßautomatik
Assembly 068339 Automatic condensate drain unit
Assemblage 068339 Purge automatique du condensat

Änderungs-Nr.
Change no.
No. de changement

Klasse/ Class/ Classe 0	2	5	Pos.	Bestell-Nr. Part No. No. de cde.	Anz/ Qty/ Qté	Benennung	Designation	Dénomination	Gewicht Weight Poids	Abmessungen Dimensions Dimensions
			5	**068337**	**1**	**Kondensat-Ablaßautomatik**	**condensate drain valve**	**soupape de purge de condense**		**3-fach**
			10	63836	1	Halterung	mounting	fixation		f. KAA
			15	64814	1	Winkel	mouting angle	angle de fixation		f. KAA
			20	N19458	2	Sechskantschraube mit Schaft			8 g	DIN 931 ; M6x30 ; 8.8 ; A3A
			25	N19496	4	Sechskantschraube m. GWD b. KPF	hex screw	hex screw	6 g	DIN 933 ; M6x20 ; 8.8 ; A3A
			30	N19461	2	Sechskantschraube mit Schaft			18 g	DIN 931 ; M8x35 ; 8.8 ; A3A
			35	N287	2	Sechskantmutter	hexagon nut	ecrou hexagonal	2 g	DIN 934 ; M6 ; 8
			40	N57	2	Sechskantmutter	hexagon nut	ecrou hexagonal	5 g	DIN 934 ; M8 ; 8
			45	N100	6	Federring	spring washer	anneau-ressort	1 g	DIN 127 ; A 6
			50	N108	2	Federring	spring washer	anneau-ressort	1 g	DIN 127 ; A 8
			55	N4180	2	Magnetspule	coil	bobine	,3 kg	230 V ; 50-60 Hz ; Typ BH
			60	N4181	2	Spule	coil	bobine	,3 kg	BH 240 V ; 50-60 Hz
			65	N4182	2	Magnetspule	coil	bobine	,3 kg	115 V ; 50-60 Hz ; Typ BH ; D=15mm
			70	N4185	2	Magnetspule	coil	bobine	,145 kg	12 V DC ; Typ BH
			75	N4186	2	Spule	coil	bobine	,145 kg	BH 24 V GS
			80	N18363	2	Magnetspule	coil	bobine		24 V ; 50-60 Hz ; Typ BH

C25.1- 7

BAUER KOMPRESSOREN

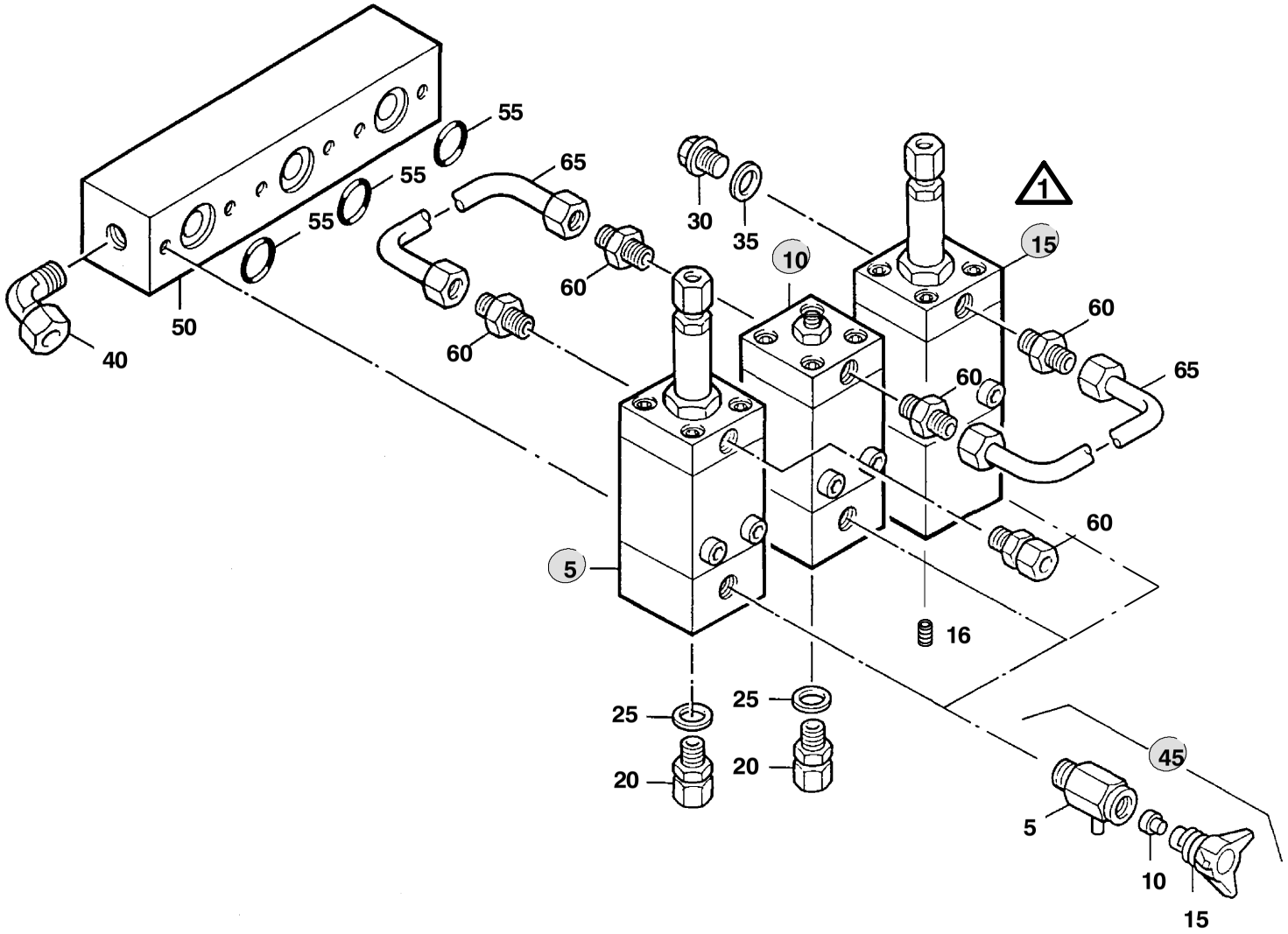

Ersatzteilsätze
Spare parts sets
Kits de pièces dét.

Baugruppe 068337 Kondensat-Ablaßautomatik
Assembly 068337 condensate drain valve
Assemblage 068337 soupape de purge de condense

Änderungs-Nr.
Change no.
No. de changement 1

Klasse/ Class/ Classe 0	2	5	Pos.	Bestell-Nr. Part No. No. de cde.	Anz/ Qty/ Qté	Benennung	Designation	Dénomination	Gewicht Weight Poids	Abmessungen Dimensions Dimensions
			5	**060410**	**1**	**Kondensat-Ablaßventil**	**condensate drain valve**	**soupape de purge de condense**	**1,23 kg**	
			10	**061010**	**1**	**Kondensat-Ablaßventil**	**condensate drain valve**	**soupape de purge de condense**	**,83 kg**	
			15	**072783**	**1**	**Kondensat-Ablaßventil**	**condensate drain valve**	**soupape de purge de condense**		
			16	66550	1	Düse	Nozzle	Buse		
			20	N3504	2	Gerade-Einschraubverschraubung	straight male stud	vissage droit	50 g	GEV 6 SR
			25	N1316	2	Dichtung	gasket	joint	1 g	A13x20x2 ; Cu
			30	N3459	1	Verschlußschraube m. BND+AUS-6KT	plug	bouchon filete	12 g	DIN 910 ; G 1/8A ; St ; A3A
			35	N4051	1	Dichtung	gasket	joint	1 g	DIN 7603 ; A10x15x1 ; Cu
			40	N1856	1	Winkel-Einschraubverschraubung	equal elbow coupling	raccord coude male	130 g	WEV 15 LRK
	3	**6**	**45**	**011430**	**3**	**Kondensat-Ablaßhahn**	**condensate drain knob**	**robinet de purge de condense**		
			50	61453	1	Kondensat-Sammelleiste	condensate manifold	listeau collecteur de condense	,96 kg	
3	3	6	55	N4333	3	O-Ring	o-ring	joint torique		15.54x2.62
			60	N20002	5	Gerader-Einschraubstutzen	connector	raccord	14 g	GES 6 LR
			65	072201	2	Verbindungsleitung kpl.				für Kondensatautomatik

Ersatzteilsätze
Spare parts sets
Kits de pièces dét.

Baugruppe 011430 Kondensat-Ablaßhahn
Assembly 011430 condensate drain knob
Assemblage 011430 robinet de purge de condense

Änderungs-Nr.
Change no.
No. de changement

Klasse/ Class/ Classe 0	2	5	Pos.	Bestell-Nr. Part No. No. de cde.	Anz/ Qty/ Qté	Benennung	Designation	Dénomination	Gewicht Weight Poids (kg)	Abmessungen Dimensions Dimensions
			5	**068410**	**1**	**Ablaßhahnkörper, kpl.**	**drain valve body**	**corps de robinet de purge**		
			10	13283	1	Dichtung	gasket	joint		
			15	**055888**	**1**	**Knebelschraube m. Sicherungsfeder**	**tommy screw with retaining**	**vis a garret avec ressort**		**rot lackiert**

Ersatzteilsätze
Spare parts sets
Kits de pièces dét.

Baugruppe 068410 **Ablaßhahnkörper, kpl.**
Assembly 068410 **drain valve body**
Assemblage 068410 **corps de robinet de purge**

Änderungs-Nr.
Change no.
No. de changement

Klasse/ Class/ Classe 0	2	5	Pos.	Bestell-Nr. Part No. No. de cde.	Anz/ Qty/ Qté	Benennung	Designation	Dénomination	Gewicht Weight Poids (kg)	Abmessungen Dimensions Dimensions
			5		1	Ablaßhahnkörper				
			10	68408	1	Schlauchnippel				

Ersatzteilsätze
Spare parts sets
Kits de pièces dét.

Baugruppe 055888 **Knebelschraube m. Sicherungsfeder**
Assembly 055888 **tommy screw with retaining**
Assemblage 055888 **vis a garret avec ressort**

Änderungs-Nr.
Change no.
No. de changement

Klasse/ Class/ Classe 0	2	5	Pos.	Bestell-Nr. Part No. No. de cde.	Anz/ Qty/ Qté	Benennung	Designation	Dénomination	Gewicht Weight Poids (kg)	Abmessungen Dimensions Dimensions
			5	11392	1	Knebelschraube	tommy screw	vis a garret		
			10	13284	1	Sicherungsfeder	locking spring	ressort d'arret		

BAUER KOMPRESSOREN

C25.1 - 8

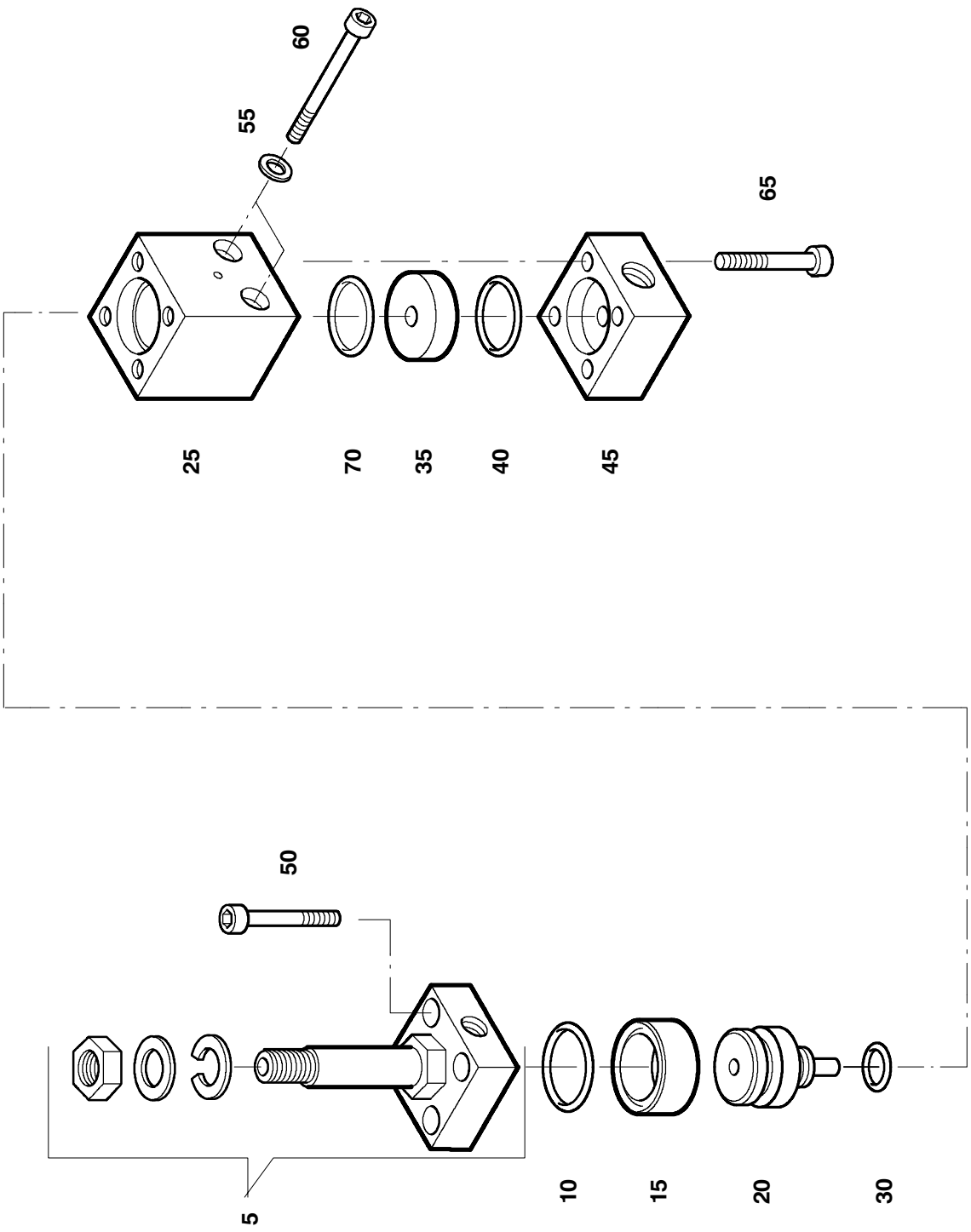

Ersatzteilsätze
Spare parts sets
Kits de pièces dét.

Baugruppe 060410 **Kondensatventil** **Änderungs-Nr.**
Assembly 060410 **condensate drain valve** **Change no.**
Assemblage 060410 **soupape de purge de condense** **No. de changement**

Klasse/ Class/ Classe			Pos.	Bestell-Nr. Part No. No. de cde.	Anz/ Qty/ Qté	Benennung	Designation	Dénomination	Gewicht Weight Poids (kg)	Abmessungen Dimensions Dimensions
0	2	5								
			5	058053	1	3/2-Wege-Magnetventil	3/2-way solenoid valve	electrovanne 3/2 voies	,385 kg	stromlos geschlossen
			10	N2720	1	O-Ring	o-ring	joint torique		37x2;FPM;70Shore
			15	N4177	1	Nutring	grouved ring	anneau a gorge	,002 kg	25x35x8x5;90 NBR;N25-35
			20	57628	1	Ventilkolben	valve piston	piston de soupape	,06 kg	f.Kondensatventil;D35
			25	60414	1	Ventilkörper			,305 kg	
			30	N3489	1	O-Ring	o-ring	joint torique		10,77x2,62;FPM;75Shore
			35	56687	1	Ventilsitz	valve seat	siege de soupape	,015 kg	PN350;NW9;D30;H10;Delrin
			40	N4178	1	O-Ring	o-ring	joint torique		17,12x2,62;FPM;75Shore
			45	60416	1	Zwischenstück	intermediate part	piece intermediaire	,23 kg	f.Kondensatventil
			50	N210	4	Zylinderschraube m. IN-6KT	allen screw	vis a six pans creux	6 g	DIN 912;M6x20;8.8;schwarz
			55	N102	2	Scheibe	washer	rondelle	1 g	DIN 125;B 6.4;St;A3A
			60	N781	2	Zylinderschraube m. IN-6KT	allen screw	vis a six pans creux	15 g	DIN 912;M6x60;8.8;schwarz
			65	N1511	4	Zylinderschraube m. IN-6KT	allen screw	vis a six pans creux	10 g	DIN 912;M6x35;8.8;schwarz
			70	N2507	1	O-Ring	o-ring	joint torique		18,77x1,78;FPM;75Shore

BAUER KOMPRESSOREN

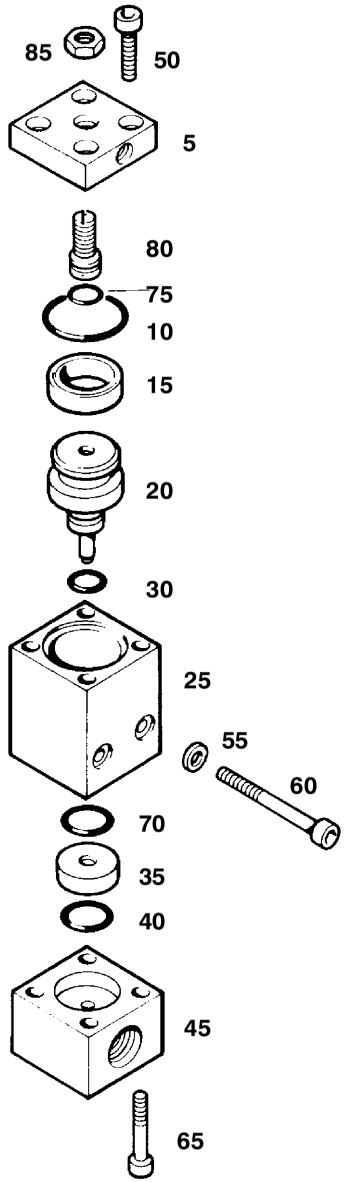

Ersatzteilsätze
Spare parts sets
Kits de pièces dét.

Baugruppe 061010 **Kondensat-Ablaßventil** **Änderungs-Nr.**
Assembly 061010 **condensate drain valve** **Change no.**
Assemblage 061010 **soupape de purge de condense** **No. de changement**

Klasse/ Class/ Classe			Pos.	Bestell-Nr. Part No. No. de cde.	Anz/ Qty/ Qté	Benennung	Designation	Dénomination	Gewicht Weight Poids	Abmessungen Dimensions Dimensions
0	2	5								
			5	61007	1	Flansch	flange	bride	,12 kg	
1	1	2	10	N2720	1	O-Ring	o-ring	joint torique		37x2
1	1	2	15	N4177	1	Nutring	grouved ring	anneau a gorge	,002 kg	25x35x8x5 ; 90 NBR ; N25-35
	1	2	20	57629	1	Ventilkolben	valve piston	piston de soupape	,05 kg	
			25		1	Ventilkörper			,305 kg	
1	1	2	30	N3489	1	O-Ring	o-ring	joint torique		10.77x2.62
	1	2	35	56691	1	Ventilsitz	valve seat	siege de soupape		
1	1	2	40	N4178	1	O-Ring	o-ring	joint torique		17.12x2.62
			45	60416	1	Zwischen-Teil	intermediate part	piece intermediaire	,23 kg	
			50	N796	4	Zylinderschraube m. IN-6KT	allen screw	vis a six pans creux	8 g	DIN 912 ; M6x25 ; 8.8 ; schwarz
			55	N102	2	Scheibe, rund	washer	rondelle	1 g	DIN 125 ; B 6.4
			60	N781	2	Zylinderschraube m. IN-6KT	allen screw	vis a six pans creux	15 g	DIN 912 ; M6x60 ; 8.8 ; schwarz
			65	N1511	4	Zylinderschraube m. IN-6KT	allen screw	vis a six pans creux	10 g	DIN 912 ; M6x35 ; 8.8 ; schwarz
1	1	2	70	N2507	1	O-Ring	o-ring	joint torique		18.77x1.78
1	1	2	75	N7091	1	O-Ring	o-ring	joint torique		9.25x1.78
			80	57353	1	Einstellschraube	adjusting screw	vis d'ajustage	,015 kg	
			85	N3764	1	Sechskantmutter	hexagon nut	ecrou hexagonal		DIN 439 ; B M8x1 ; 04

BAUER KOMPRESSOREN

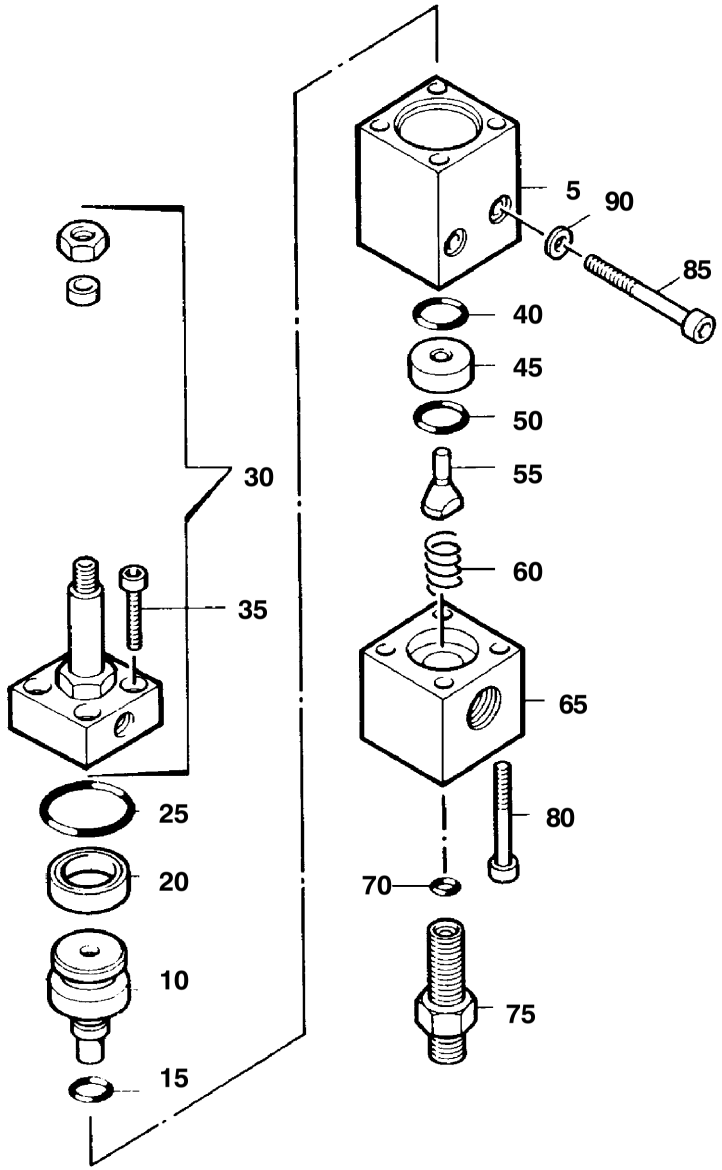

Ersatzteilsätze
Spare parts sets
Kits de pièces dét.

Baugruppe 072783 **Kondensat-Ablaßventil** **Änderungs-Nr.**
Assembly 072783 **Change no.**
Assemblage 072783 **No. de changement**

Klasse/ Class/ Classe 0	2	5	Pos.	Bestell-Nr. Part No. No. de cde.	Anz/ Qty/ Qté	Benennung	Designation	Dénomination	Gewicht Weight Poids	Abmessungen Dimensions Dimensions
			5		1	Ventilkörper				
			10	60417	1	Ventilkolben	valve piston	piston de soupape	,155 kg	
			15	N3489	1	O-Ring	o-ring	joint torique		10.77x2.62
			20	N4177	1	Nutring	grouved ring	anneau a gorge	,002 kg	25x35x8x5 ; 90 NBR ; N25-35
			25	N2720	1	O-Ring	o-ring	joint torique		37x2
			30	058053	1	3/2-Wege-Magnetventil	3/2-way solenoid valve	electrovanne 3/2 voies	,19 kg	
			35	N210	4	Zylinderschraube m. IN-6KT	allen screw	vis a six pans creux	6 g	DIN 912 ; M6x20 ; 8.8 ; schwarz
			40	N2507	1	O-Ring	o-ring	joint torique		18.77x1.78
			45	90489	1	Ventilsitz	valve seat	siege de soupape		f. Kondensatablaßventil
			50	N17079	1	O-Ring	o-ring	joint torique		15x1.5
			55	66002	1	Dichtkegel	sealing cone	cone d'etancheite		f. Kondensatablaßventil
			60	60600	1	Druckfeder	pressure spring	ressort de pression	5 g	
			65	68336	1	Zwischen-Teil	intermediate part	piece intermediaire		
			70	N4600	1	O-Ring	o-ring	joint torique		2.9x1.78
			75	68323	1	Verschraubung				
			80	N1040	4	Zylinderschraube m. IN-6KT	allen screw	vis a six pans creux		DIN 912 ; M6x65 ; 8.8 ; schwarz
			85	N781	4	Zylinderschraube m. IN-6KT	allen screw	vis a six pans creux	15 g	DIN 912 ; M6x60 ; 8.8 ; schwarz
			90	N102	4	Scheibe, rund	washer	rondelle	1 g	DIN 125 ; B 6.4

Lubricating Oil List

BAUER KOMPRESSOREN

1. GENERAL

After extensive tests with many different kinds of lubricants, we have decided to authorize the following brands of oil for use in **BAUER** compressors under the given operating conditions.

This list is up to date at the time of printing and will be reviewed continuously. Should your list or your instruction manual be older, please request the latest edition from **BAUER** Customer Services. When using any of the oils listed below, please follow the oil change intervals and the oil filling level described for the equivalent **BAUER** compressor oil in the instruction manual of your unit.

Oil type			Use				Ambient temperature	
Brand name	Designation	Type	A Breathing	I Industry	G Gas	C CNG	+5 ... +35 °C	+5 ... +45 °C
BAUER KOMPRESSOREN	Special Compressor oil Part no. N22138 a)	M	+	+	+	-	+	+
BAUER KOMPRESSOREN	Special Compressor oil Part no. N24906 a)	M	-	-	-	+	+	+
BAUER KOMPRESSOREN	Special Compressor oil Part no. N19745 b)	S	+	+	+	-	+	+
BP	Energol RC 150 a)	M	+	+	-	-	+	◆
DEA	Actro EP VDL150 a)	M	+	+	-	-	+	◆
LIQUI MOLY	LM 750 with corrosion protection b)	S	+	+	+	-	+	+
Anderol	755 b)	S	+	+	+	-	+	+
Mobil	Rarus 829 b)	S	-	+	+	-	+	+
Shell	Corena P150 a)	M	+	+	+	-	+	+
Shell	Rimula Ultra 5W-30 a)	M	-	-	-	+	+	+

Oil type

S	synthetic oil
M	mineral oil

Application

A	approved for breathing air application with BAUER air purification systems
I	suitable for industrial air compressor units
G	suitable for gas compressor units for dry and highly pure gases
C	suitable for compressed natural gas compressors (CNG filling stations)
a)	oil change every 1000 operating hours
b)	oil change every 2000 operating hours

Suitability

+	= suitable
◆	= partly suitable
-	= not suitable

KB 70851/01/00

Edition January 2000

BAUER KOMPRESSOREN GmbH

Postfach 710260 D-81452 München Tel. 089/78049-0 Fax 089/78049167

BAUER KOMPRESSOREN

Lubricating Oil List

2. TYPE OF OIL

Due to the thermal load on the compressor only high quality oil should be used. You are recommended to restrict oils to those which have been approved by us and are listed in the instruction manual or in the lubricating list overleaf.

Our compressor units are delivered ex works with lubricating oil filled into the crankcase or as consignment, depending on the model, as follows:

Breathing air, industrial air and gas compressor units:	**BAUER special Compressor oil, part no. N22138**
CNG compressor units	**BAUER special Compressor oil, part no. N24906**

For operation under difficult conditions, such as continuous running and/or high ambient temperatures, we only recommend the BAUER special compressor oils acc. to the list on the previous page. These have proved excellent quality under ambient temperatures between +5 °C and +45 °C. For lower temperatures a compressor heating device is required which is capable of pre-heating the unit up to +5 °C.

For operation under less severe conditions, and for intermittent operation, i.e. when the compressor is not used for longer periods between the operating periods, we also recommend the use of oils acc. to the list on the previous page. These oils are suitable for ambient temperatures between +5 °C and +35 °C. Here also, a pre-heating device will be required if ambient temperatures should fall below +5 °C.

2.1. Changing the Oil Type

CAUTION

To avoid severe damage to the compressor unit when changing to another oil type, the following measures should be strictly adhered to.

- Drain mineral oil while still warm.
- Check valves, coolers, separators, purifiers and all pneumatic tubes and hoses for deposits.

If deposits are present, perform the following steps:

- Remove deposits or change valves, coolers, separators, purifiers and all pneumatic tubes and hoses.
- Change oil filter, if applicable.
- Fill compressor with the new oil.
- After approx. 100 operating hours, replace oil filter again (if applicable). Check lube oil for degree of contamination, and change if necessary.
- Top up with same oil type.

3. OIL CHANGE

Mineral oil	Every 1000 operating hours, at least annually
Synthetic oil	Every 2000 operating hours, at least bi-annually
Oil capacity	Refer to compressor unit instruction manual

BAUER compressor oil is available in the following quantities:

Oil quantity ▼ Oil type ▶	**Mineral oil N22138**	**Mineral oil N24906**	**Synthetic oil N19745**
1 l bottle	part no. N22138-1	part no. N24906-1	part no. N19745-1
5 l container	part no. N22138-5	part no. N24906-5	part no. N19745-5
20 l container	part no. N22138-20	part no. N24906 -20	part no. N19745-20